Inelastic Structural Behavior

The learning objectives of this chapter are:

- Understand the incorporation of thermal and initial strains in the theory and analysis of axial members.
- Understand the analysis techniques for incorporating elastic-perfectly plastic material behavior in axial members, circular shafts, and symmetric beams.
- Understand the incorporation of non-linear material models into the basic simplified theories on structural members.

madinvable.org

Pick up point in the logic

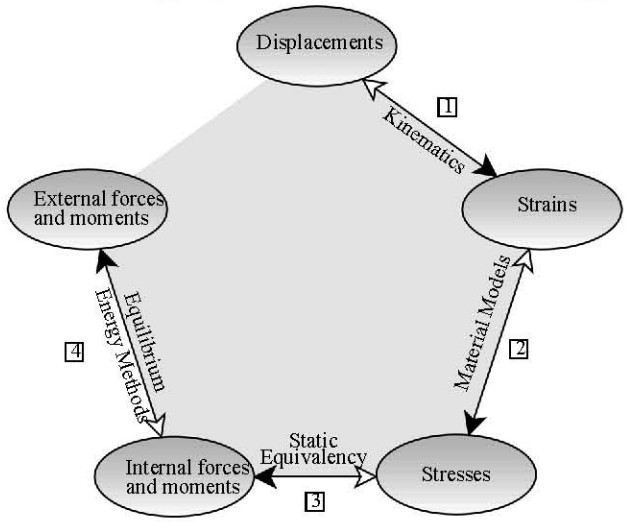

- Assumptions 1 through 7

	Axial	Bending	Torsion
Deformation	$u = u_o(x)$ **(3.1-A)**	$v = \mathrm{v}(x)$ **(3.1a-B)** $u = -y(d\mathrm{v}/dx)$ **(3.1b-B)**	$\phi = \phi(x)$ **(3.1-T)**
Strain	$\varepsilon_{xx} = du_o/dx$ **(3.2-A)**	$\varepsilon_{xx} = -y(d^2\mathrm{v}/dx^2)$ **(3.2-B)**	$\gamma_{x\theta} = \rho(d\phi/dx)$ **(3.2-T)**
Stress	The following assumptions regarding material models will be dropped. Assumption 5: There are no inelastic strains. Assumption 6: Material is elastic. Assumption 7: Stress and strains are linearly related.		
Static equiva-lency	$N = \int_A \sigma_{xx} dA$ **(3.3a-A)** $M_z = -\int_A y\sigma_{xx} dA = 0$ **(3.3b-A)** $M_y = -\int_A z\sigma_{xx} dA = 0$ **(3.3c-A)**	$N = \int_A \sigma_{xx} dA = 0$ **(3.3a-B)** $M_z = -\int_A y\sigma_{xx} dA$ **(3.3b-B)** $V_y = \int_A \tau_{xy} dA$ **(3.3c-B)**	$T = \int_A \rho\tau_{x\theta} dA$ **(3.3-T)**

madhuvable.org

Effects of Temperature

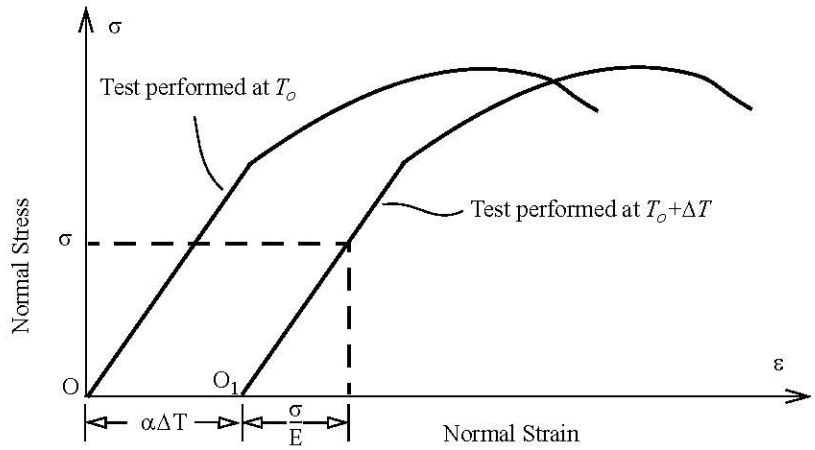

$$\varepsilon = \frac{\sigma}{E} + \alpha \Delta T$$

α is linear coefficient of thermal expansion.

- No thermal stresses are produced in a homogenous, isotropic, unconstrained body due to uniform temperature changes.

$$\begin{aligned}
\varepsilon_{xx} &= [\sigma_{xx} - \nu(\sigma_{yy} + \sigma_{zz})]/E + \alpha \ \ \Delta T \\
\varepsilon_{yy} &= [\sigma_{yy} - \nu(\sigma_{zz} + \sigma_{xx})]/E + \alpha \ \ \Delta T \\
\varepsilon_{zz} &= [\sigma_{zz} - \nu(\sigma_{xx} + \sigma_{yy})]/E + \alpha \ \ \Delta T \\
\gamma_{xy} &= \tau_{xy}/G \\
\gamma_{yz} &= \tau_{yz}/G \\
\gamma_{zx} &= \tau_{zx}/G
\end{aligned}$$

Thermal Strain

Mechanical Strain

madinvable.org

C5.1 The stress at a point, material properties, and change in temperature are as given below. Calculate ε_{xx}, ε_{yy}, γ_{xy}, ε_{zz}, and σ_{zz} (a) assuming plane stress, and (b) assuming plane strain.

$$\sigma_{xx} = 300\ MPa(C) \qquad \sigma_{yy} = 300\ MPa(T) \qquad \tau_{xy} = 150\ MPa$$

$$G = 15\ GPa \qquad \nu = 0.2 \qquad \alpha = 26.0\mu/^{o}C \qquad \Delta T = 75^{o}C$$

madinvable.org

Initial strain in axial members

Examples of initial strain & stresses.

Tightening a nut pretensions the bolt.

Tolerances during assembly introduce strains and stresses in some members.

Steel bars may be prestressed in reinforced concrete to introduce residual stresses.

- For thermal strains $\varepsilon_o = \alpha \Delta T$
- Pitch is the distance travelled by the nut when it is tightened one full turn. Pitch is the distance between two adjoining peaks on the threads.

Assume an initial strain of ε_o

Kinematics: $\varepsilon_{xx} = \frac{\mathrm{d}u}{\mathrm{d}x}(x)$

Stresses: $\varepsilon_{xx} = \frac{\sigma_{xx}}{E} + \varepsilon_o = \frac{\mathrm{d}u}{\mathrm{d}x}$ or $\sigma_{xx} = E\left(\frac{\mathrm{d}u}{\mathrm{d}x} - \varepsilon_o\right)$

Internal Axial Force: $N = \int_A \sigma_{xx} dA$

Assume material homogeneity across the cross-section and ε_o is uniform.

$$N = \int_A \left(E\frac{\mathrm{d}u}{\mathrm{d}x} - E\varepsilon_o\right) dA = \frac{\mathrm{d}u}{\mathrm{d}x}\int_A E\,dA - \int_A E\varepsilon_o dA = \frac{\mathrm{d}u}{\mathrm{d}x}EA - EA\varepsilon_o$$

$$\frac{\mathrm{d}u}{\mathrm{d}x} = \frac{N}{EA} + \varepsilon_o \qquad \sigma_{xx} = \frac{N}{A}$$

Assumptions 9 through 11 are assumed valid. N, E and A are constant between x_1 and x_2

Assume ε_o also does not change with x

$$u_2 - u_1 = \frac{N(x_2 - x_1)}{EA} + \varepsilon_o(x_2 - x_1) \text{ or } \delta = \frac{NL}{EA} + \varepsilon_o L$$

- *P*re-strains (stresses) can be analyzed by using ε_o as negative to the actual initial strain.
- δ is the deformation of the bar in the undeformed direction.
- If N is a tensile force then δ is elongation.
- If N is a compressive force then δ is contraction.
- The sign of $\varepsilon_o L$ must be consistent with the force N shown on the free body diagram.
- Deformation of a member shown in the drawing of approximate deformed geometry must be consistent with the internal force in the member that is shown on the free body diagram.
- No thermal stresses are produced in statically determinate structures.
- In displacement method displacements of points or deformation members are treated as unknowns.
- In force method reaction forces or internal forces are treated as unknowns.

madhuvable.org

General Procedure for Indeterminate Structure

The procedure outlined can be used for solving statically indeterminate structure problems by either the force method or by the displacement method.

1. If there is a gap, assume it will close at equilibrium.
2. Draw free-body diagrams, noting the tensile and compressive nature of internal forces.
3. Write equilibrium equations relating internal forces to each other.

   or

   Write internal forces in terms of reaction forces using equilibrium equations.
4. Draw an exaggerated approximate deformed shape, ensuring that the deformation is consistent with the free body diagrams of step 2. Write compatibility equations relating deformation of the bars to each other.

   or

   Write compatibility equations in terms of unknown displacements of points on the structure, if displacement method is to be used.
5. Write internal forces in terms of deformations using $\delta = \frac{NL}{EA} + \varepsilon_o L$ ensuring consistency in sign for the three terms.
6. Solve the equations of steps 3, 4, and 5 simultaneously for the unknown.
7. Check whether the assumption of gap closure in step 1 is correct.

madhuvable.org

C5.2 The rigid bar is horizontal when the unit is put together by finger-tightening the nut. The pitch of the threads is 0.125 inch. Develop a table in steps of quarter turn of the nut that can be used for prescribing the pre-tension in bar B. Maximum number of quarter turns is limited by the yield stress.

	Bar A	Bar B
Modulus of Elasticity	10,000 ksi	30,000 ksi
Yield Stress	24 ksi	30 ksi
Area of cross-section	0.5 in^2	0.75 in^2

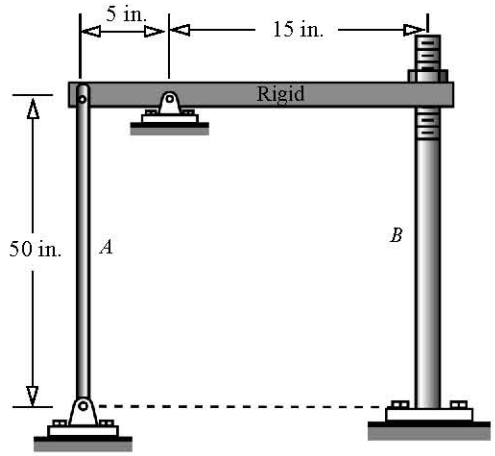

C5.3 Determine the axial stress in bar A of problem C5.2 assuming that the nut is turned 1 full turn and the temperature of bar A is decreased by 50°F. The coefficients of thermal expansion for bar A is $\alpha_{st} = 22.5\ \mu / {}^{o}F$.

madinvable.org

Class Problem 5.1

Write equilibrium equations, compatibility equations, and $\delta = \frac{NL}{EA} + \varepsilon_o L$ for each member using the given data. **No need to solve**.

Data: $\Delta T = 100^{o}F\alpha = 20\ \mu/^{o}F$ $E = 10{,}000$ ksi $A = 5\ in^2$

Use displacement of point E δ_E as unknown.

$$\alpha \Delta T L = 0.08$$

$$EA = 50{,}000$$

$$L/EA = 0.8(10^{-3})$$

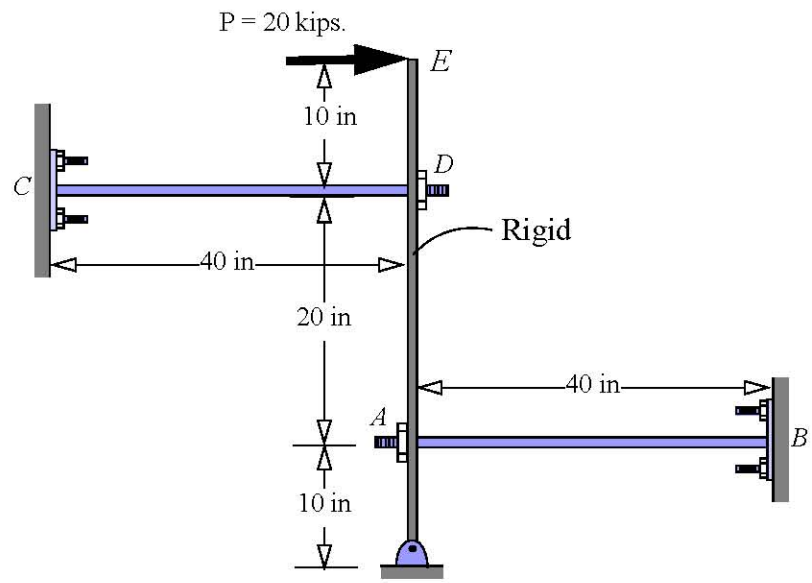

madiuvable.org

Class Problem 5.2

Write equilibrium equations, compatibility equations, and $\delta = \frac{NL}{EA} + \varepsilon_o L$ for each member using the given data. **No need to solve**.Use reaction force at A (R_A) as unknown.

$\Delta T = 100^{o}F$ $\alpha = 20\ \mu/^{o}F$ $E = 10{,}000$ ksi $A = 5\ in^2$

$\alpha \Delta T = 2(10^{-3})$

$EA = 50,000$

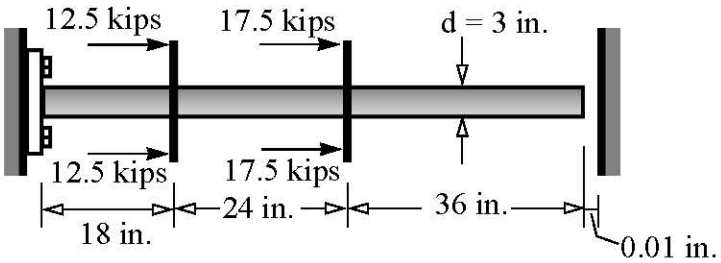

madhuvable.org

Non-linear material models

- Elastic-perfectly plastic in which the non-linearity is approximated by a constant.
- Linear strain hardening model in which the non-linearity is approximated by a linear function.
- Power law model in which the non-linearity is approximated by one term non-linear function.

Elastic-perfectly plastic

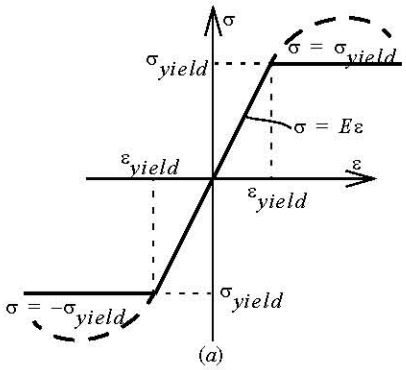

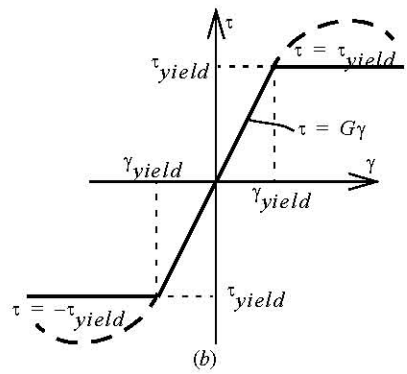

$$\sigma = \begin{cases} \sigma_{yield} & \varepsilon \geq \varepsilon_{yield} \\ E\varepsilon & -\varepsilon_{yield} \leq \varepsilon \leq \varepsilon_{yield} \\ -\sigma_{yield} & \varepsilon \leq -\varepsilon_{yield} \end{cases} \qquad \tau = \begin{cases} \tau_{yield} & \gamma \geq \gamma_{yield} \\ G\gamma & -\gamma_{yield} \leq \gamma \leq \gamma_{yield} \\ -\tau_{yield} & \gamma \leq -\gamma_{yield} \end{cases}$$

- The set of points forming the boundary between the elastic and plastic region on a body, is called the elastic-plastic boundary.

1. On the elastic-plastic boundary the strain must be equal to the yield strain, and stress equal to yield stress.
2. Deformations and strains are continuous at all points including points at the elastic plastic boundary.
3. In beam bending, the location of neutral axis depends material property, geometry, and loading.

madinvable.org

Linear strain hardening material model

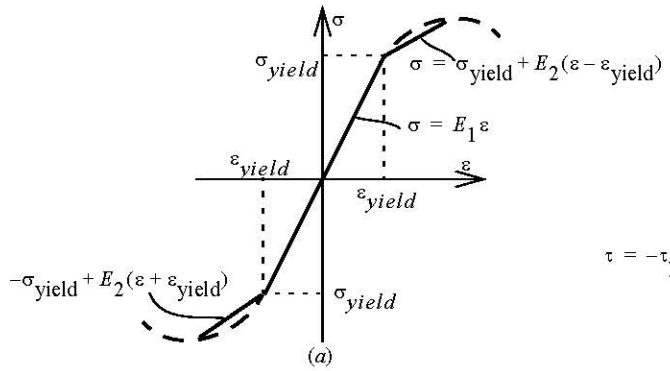

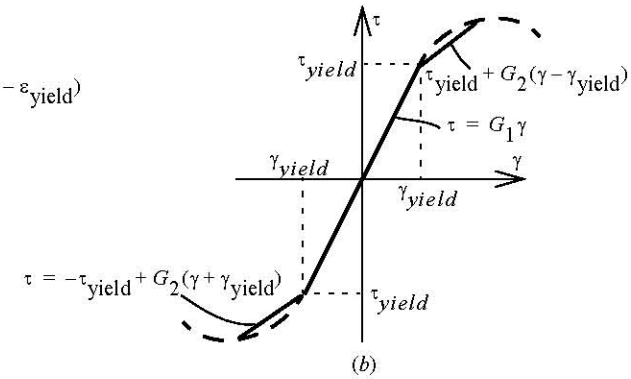

$$\sigma = \begin{cases} \sigma_{yield} + E_2(\varepsilon - \varepsilon_{yield}) & \varepsilon \geq \varepsilon_{yield} \\ E_1 \varepsilon & -\varepsilon_{yield} \leq \varepsilon \leq \varepsilon_{yield} \\ -\sigma_{yield} + E_2(\varepsilon + \varepsilon_{yield}) & \varepsilon \geq \varepsilon_{yield} \end{cases}$$

Power Law

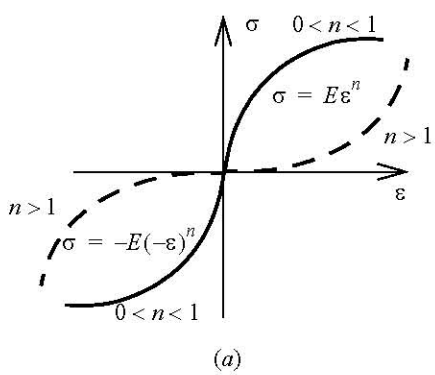

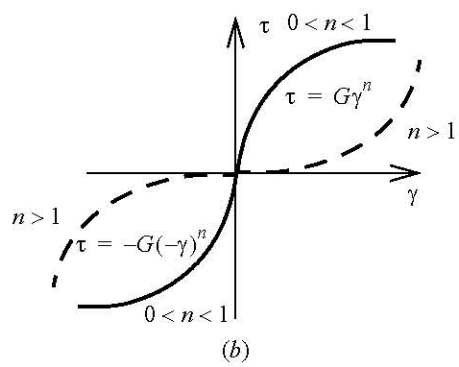

$$\sigma = \begin{cases} E\varepsilon^n & \varepsilon \geq 0 \\ -E(-\varepsilon)^n & \varepsilon < 0 \end{cases}$$

madinvable.org

Elastic-perfectly plastic axial members

- The plot of the applied force vs. the deflection at that point in the direction of the applied force is called the load deflection curve.
- The load at which the structure exhibits unbounded deformation is called the collapse load.

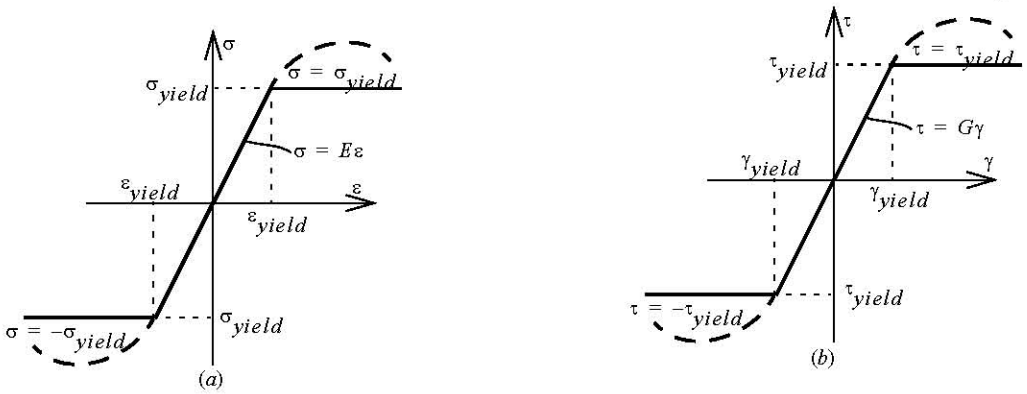

Elastic: $\delta = \dfrac{NL}{EA}$

- The strain on the stress-strain curve is determined to satisfy compatibility equations.

madinvable.org

C5.4 A force F is applied to the roller that slides inside a slot as shown below. Both bars have an area of cross-section of A = 100 mm^2, modulus of elasticity E = 200 GPa, and a yield stress of 250 MPa. Bar AP and BP have lengths of L_{AP}= 200 mm and L_{BP}= 250 mm respectively. Draw the load deflection curve and determine the collapse load.

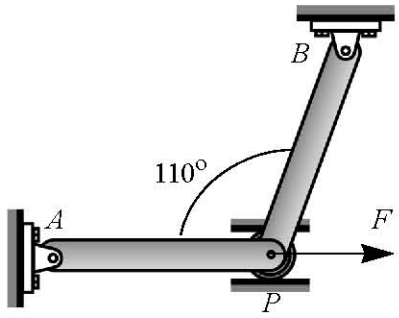

madhuvable.org

C5.5 Three steel (E = 200 GPa, σ_{yield} = 200 MPa) bars shown below have lengths of L_A=4 m, L_B=3 m and L_C= 2 m respectively. All bars have the same cross-sectional area of A = 500 mm ^{2}. Draw the load deflection curve for the structure and determine the collapse load.

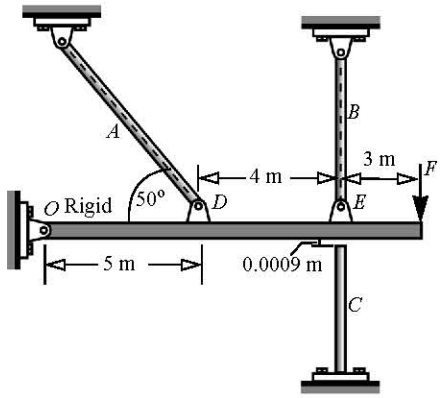

madinvable.org

Elastic-perfectly plastic circular shafts

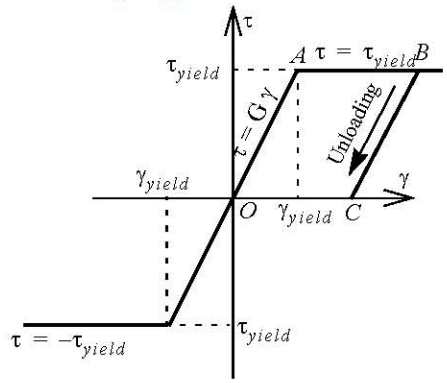

- Before yield stress the material stress-strain relationship is represented by Hooke's Law and after yield stress the stress is assumed to be constant.
- To determine the strain (deformation) in the horizontal portion AB of the curve we have to use the requirement that deformation must be continuous.
- Unloading (elastic recovery) from a point in the plastic region is along line BC which is parallel to the linear portion of the stress strain curve OA.

Kinematic: $\gamma_{x\theta} = \rho \dfrac{d\phi}{dx}(x)$

Elastic: $\tau_{x\theta} = \dfrac{T\rho}{J}$ $\qquad \phi_2 - \phi_1 = \dfrac{T(x_2 - x_1)}{GJ}$

At the elastic-plastic boundary: $\gamma_{yield} = \rho_y \dfrac{d\phi}{dx}$; If ρ_y is not a function of x:

$$\phi_2 - \phi_1 = \frac{\gamma_{yield}}{\rho_y}(x_2 - x_1)$$

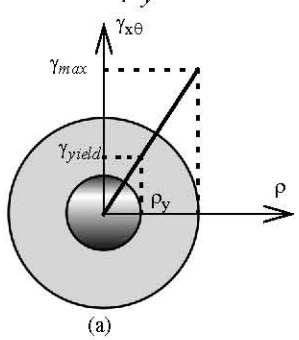

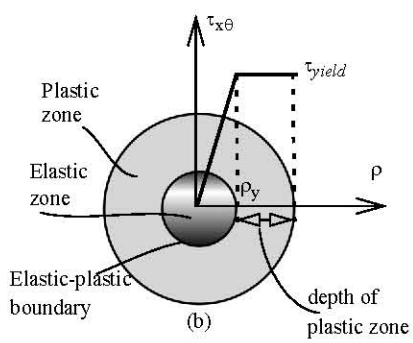

Stress distribution

$$\tau = \begin{cases} \dfrac{\tau_{yield}\rho}{\rho_y} & \rho \le \rho_y \\ \tau_{yield} & \rho \ge \rho_y \end{cases}$$

Internal equivalent torque: $T = \int_A \rho \tau_{x\theta} dA$

madinvable.org

C5.6 The shaft shown below made from elastic - perfectly plastic material has a shear yield stress of 200 MPa and a shear modulus of G = 80 GPa. The plastic zone in section AB is 25 mm deep. Determine: (a) the torque T_{ext} (b) the rotation of section at B. (c) the residual stress in AB when the external torque T_{ext} is removed.

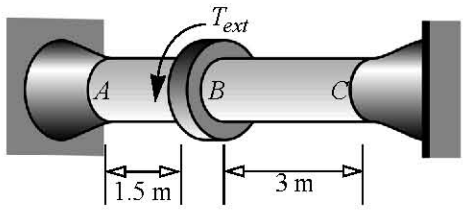

madhuvable.org

Class Problem 5.3

A shaft made from elastic-perfectly plastic. Due to the action of the torque the depth of plastic zone in *AB* was 1 in. **Draw the shear strain and shear stress distribution in section *AB* and *BC*.**

Data: $\gamma_y = 1.25(10^{-3})$ $\tau_y = 15$ ksi $G = 12,000$ ksi

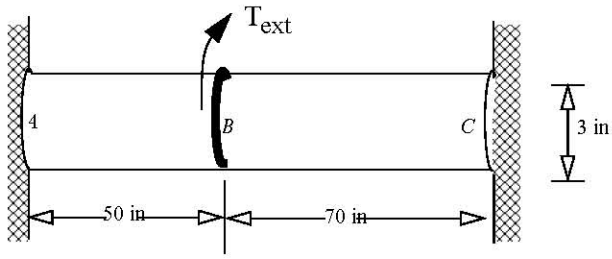

Section *AB*

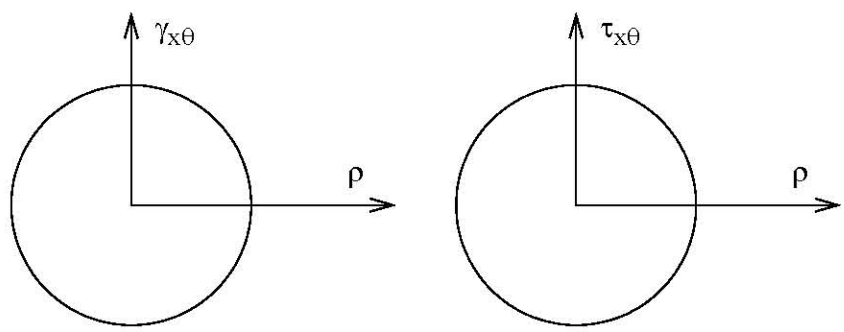

Section *BC*

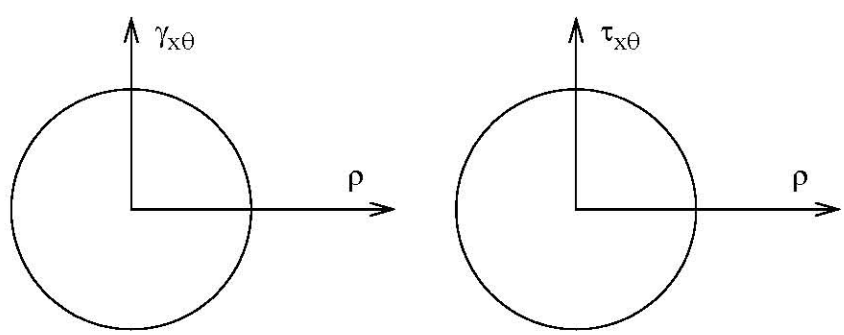

madhuvable.org

Elastic-perfectly plastic beams

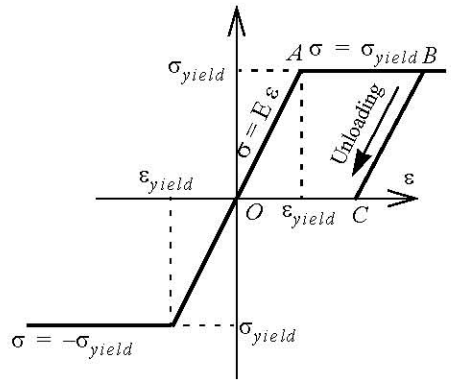

- The bending normal strain is linear across the cross section even if part of the cross section becomes plastic.
- For pure bending, the normal stress distribution of σ_{xx} should result in zero axial force even if part of the cross section becomes plastic.
- Before yield stress, the material stress–strain relationship is represented by Hooke's law; after yield stress, the stress is assumed to be constant.
- At the elastic–plastic boundary, the bending normal stress should equal the yield stress, and the bending normal strain must equal the yield strain.
- A plastic region will start growing from either the top or the bottom of the cross section because the maximum bending normal stress occurs at the point furthest from the neutral axis.
- Unloading (elastic recovery) from a point in the plastic region is along line *BC*, which is parallel to the linear portion of the stress–strain curve *OA*.

madinvable.org

Stress distribution and changes in neutral axis location

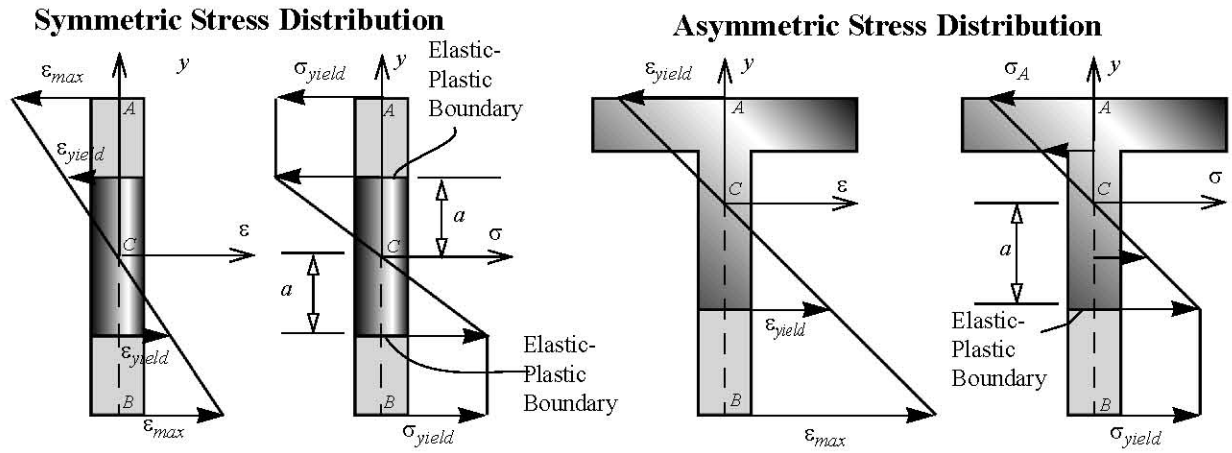

$$N = \int_A \sigma_{xx} dA = 0 \qquad M_z = -\int_A y\sigma_{xx} dA \qquad f = M_p / M_e$$

- The moment at which the maximum bending normal stress just reaches the yield stress is called the elastic moment and will be designated by M_e.
- The internal moment for which the entire cross-section becomes fully plastic is called the plastic moment and will be designated by M_p
- The ratio of the plastic moment to the elastic moment is called the shape factor for the cross-section and will be designated by f.

madinvable.org

C5.7 An elastic - perfectly plastic material has a yield stress of σ_{yield} = 40 ksi. Point A in the figure below is at yield stress due to bending of the beam. (a) Determine the location of the neutral axis assuming it is in the web.(b) The applied moment that produced the state of stress.

C5.8 For the cross-section shown below determine the shape factor

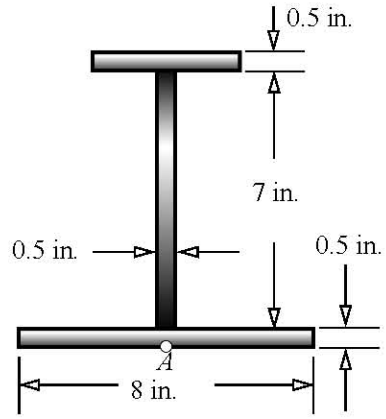

madhuvable.org

Class Problem 5.4

Point *A* on the cross-section shown just reaches yield stress in *compression* at a given load. Parameter 'a' represent the location of the elastic plastic boundary from the neutral axis, which we assume is in the web. **Sketch the strain and stress distribution as a function of y**. Write coordinates at each line.

Data: $\sigma_{yield} = 30$ ksi $\quad \varepsilon_{yield} = 0.001 \quad E = 30,000$ ksi

.

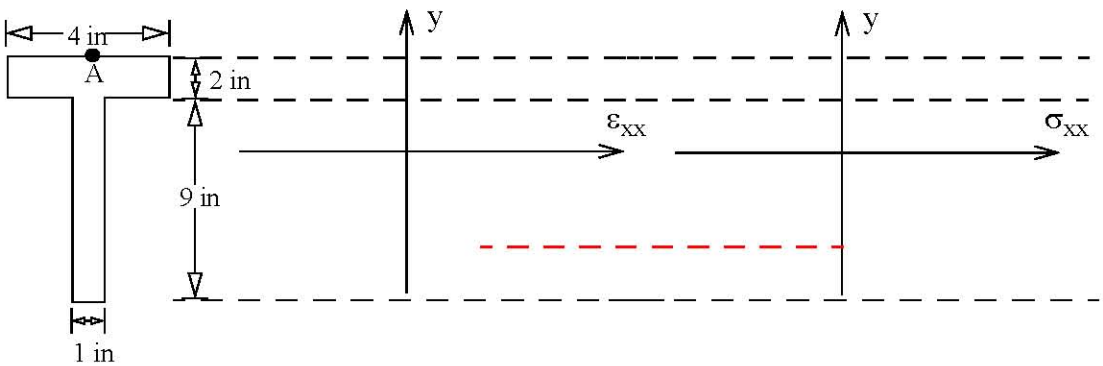

madinvable.org

Non-linear models in structural members

Kinematics

Axial	Bending	Torsion
$\varepsilon_{xx} = \frac{du}{dx}(x)$	$\varepsilon_{xx} = -y\frac{d^2 v}{dx^2}(x)$	$\gamma_{x\theta} = \rho\frac{d\phi}{dx}(x)$

Stresses

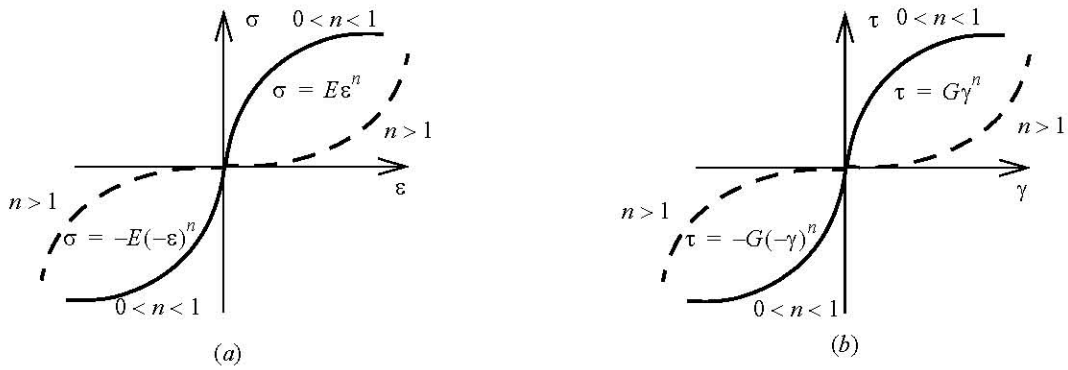

Strain hardening (n<1) ---Plastics & metals in plastic region.
Strain softening (n >1)---Rubber, muscles, organic materials.

$$\sigma = \begin{cases} E\varepsilon^n & \varepsilon \geq 0 \\ -E(-\varepsilon)^n & \varepsilon < 0 \end{cases} \qquad \tau = \begin{cases} G\gamma^n & \gamma \geq 0 \\ -G(-\gamma)^n & \gamma < 0 \end{cases}$$

Static equivalency (Internal Forces and Moments)

Axial	Bending	Torsion
$N = \int_A \sigma_{xx} dA$	$N = \int_A \sigma_{xx} dA = 0$ $M_z = -\int_A y\sigma_{xx} dA$ $V_y = \int_A \tau_{xy} dA$	$T = \int_A \rho\tau_{x\theta} dA$

madinvable.org

C5.9 A circular solid shaft of radius R is made from a non-linear material that has a shear stress-shear strain relationship given by $\tau = K\gamma^{0.4}$. Show

$$\tau_{max} = 0.5411\frac{T}{R^3} \qquad \phi_2 - \phi_1 = 0.2154(x_2 - x_1)\left(\frac{T}{KR^{3.4}}\right)^{2.5}$$

where τ_{max} is the maximum shear stress at a section, T is the internal torque at the section, ϕ_2 , and ϕ_1 are the rotation of section at x_1 and x_2.

madhuvable.org

C5.10 The stress-strain curve in tension, for a material is given by $\sigma = K\varepsilon^{0.5}$. For a rectangular cross-section show that the bending normal stress is given by:

$$\sigma_{xx} = \begin{cases} \dfrac{-5\sqrt{2}}{bh^2}\left(\dfrac{y}{h}\right)^{0.5} M_z & y > 0 \\ \dfrac{5\sqrt{2}}{bh^2}\left(\dfrac{-y}{h}\right)^{0.5} M_z & y < 0 \end{cases}$$

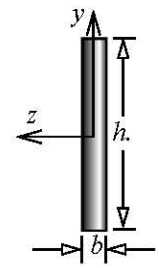

madhuvable.org

Viscoelasticity

Solids exhibiting stress-strain behavior over time that has similarities to a viscous fluid are said to be viscoelastic.

1. a solid under constant stress (load) continues to deform over time--Creep
2. a solid under constant strain (deformation) shows a decrease in stress over time--Relaxation.

Examples:

Turbine blades, boilers and pipes in power plants. (Metals at temperatures greater than 1/3 of melting point).

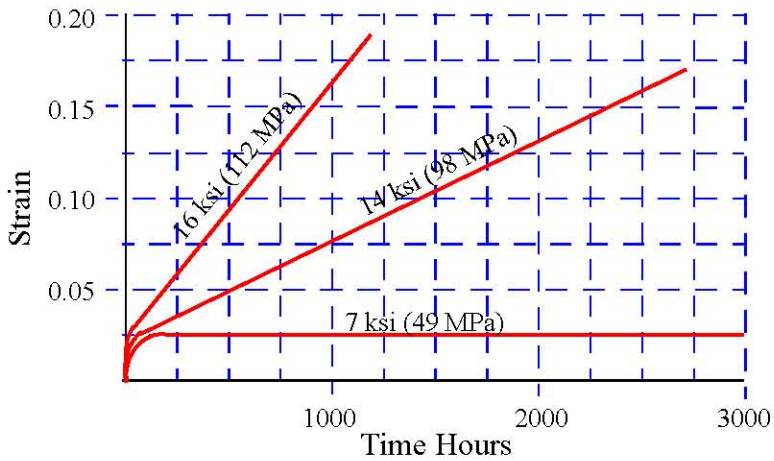

Wooden beams & floors in old houses.

Muscles, plastics, putty, polymer composites.

Quasistatic: Inertial effects (dynamic effects) can be neglected and equilibrium analysis can be conducted like that of a Static problem.

madhuvable.org

Viscoelastic constitutive equations

These are created using Springs and Dashpots in series and parallel.

- A material model does not fit experimental data well----High error in analysis.
- A material model fits experimental data very accurately----May be too complex to build a theory.
- Linear Springs---Hooke's law

  Non-linear Springs---Non-linear material behavior.

  Linear Dashpot-----Newtonian Fluids

  Non-linear Dashpots--Non-Newtonian fluid.

$$\sigma = E\varepsilon$$

$$\sigma = \mu\frac{d\varepsilon}{dt}$$

E = Elasticity parameter

μ = Viscosity parameter

For model construction we visualize:

Deformation as analogous to strain (ε)

Force as analogous to stress (σ)

Maxwell Model

$$\boxed{\frac{d\varepsilon}{dt} = \frac{1}{E}\frac{d\sigma}{dt} + \frac{\sigma}{\mu}}$$

- If $\mu \to \infty$ then we get an elastic behavior.
- If $E \to \infty$ then we get a viscous behavior.

Kelvin Model

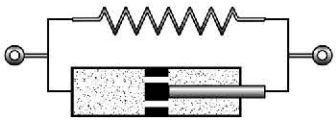

$$\boxed{\sigma = \mu\frac{d\varepsilon}{dt} + E\varepsilon}$$

- If $\mu \to 0$ then we get an elastic behavior.
- If $E \to 0$ then we get a viscous behavior.

madinvable.org

Creep Test

- Tension test to obtain viscoelastic material properties.
- Material subjected to step change in stress and held constant.

$$\sigma = \sigma_o \langle t \rangle^0$$

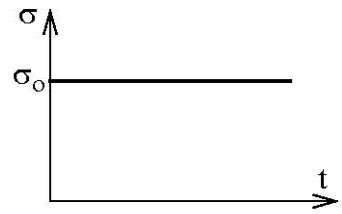

Maxwell model response:

$$\varepsilon(t) = \frac{\sigma_o}{E} + \frac{\sigma_o}{\mu} t$$

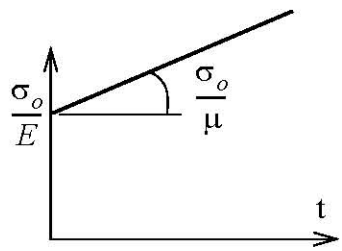

- As $t \to \infty$ the strain $\varepsilon \to \infty$, i.e., deformation and strain grow continuously like a fluid. For this reason Maxwell materials are often called Maxwell fluid.

Kelvin model response

$$\varepsilon(t) = \frac{\sigma_o}{E}[1 - e^{-(E/\mu)t}]$$

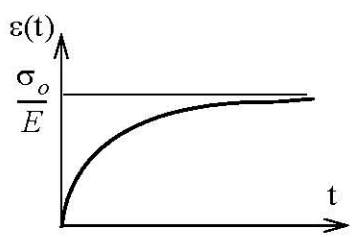

- As $t \to \infty$ the strain $\varepsilon \to \sigma_o/E$, i.e., the material is elastically deformed and hence Kelvin material behaves like a solid and is often referred to as Kelvin solid.
- The ratio μ/E has dimensions of time and may be considered a material constant. This ratio will dictate at what rate the Kelvin material reach the elastic solution. This ratio in creep test is referred to as the retardation time.

madinvable.org

Relaxation test

- Relaxation test is another widely used test for determining viscoelastic properties.
- Material subjected to step change in stress and held constant.

$$\varepsilon(t) = \varepsilon_o \langle t \rangle^0$$

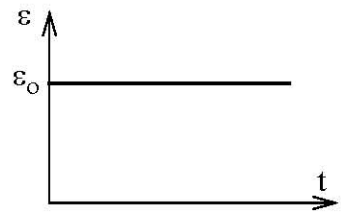

Maxwell model response

$$\sigma(t) = E\varepsilon_o e^{-(E/\mu)t}$$

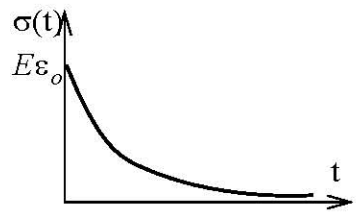

- As $t \to \infty$ the stress $\sigma \to 0$, i.e., material becomes unstressed with time.
- the ratio μ/E has the dimension of time and this ratio will control the rate at which the stress is relaxed. In relaxation test this ratio is referred to as *relaxation time*.

Kelvin model response

$$\sigma = \mu\varepsilon_o \langle t \rangle^{-1} + E\varepsilon_o \langle t \rangle^0$$

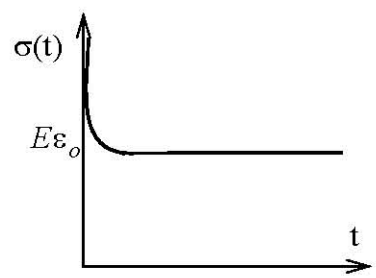

madinvable.org

C5.11 The roller at P slides in the slot due to the force F = 9.21 kN. Member AP has an area of cross-section of A = 100 mm^2 and a modulus of elasticity E = 200 GPa. The bar material has viscoelasticity properties shown below. Determine the displacement of the roller at (a) time t = 0 and (b) t = 2000 hours.

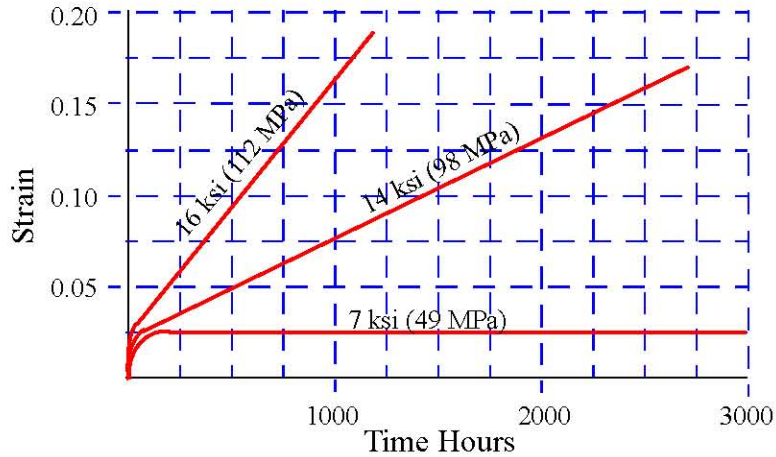

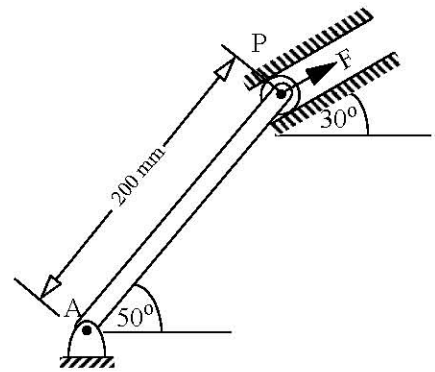

madhuvable.org

Generalized viscoelastic linear models

- More springs and more dashpots can be put together in series and parallel to create more complex models, which are differential equations in time that represent the constitutive relationship between stress and strain.

$$\sum_{i=0}^{n} p_i \frac{d^i \sigma}{dt^i} = \sum_{j=0}^{m} q_j \frac{d^j \varepsilon}{dt^j}$$

where, p_i and q_j are related to E's and μ's in some manner dictated by the configuration of springs and dashpots; n and m are integers that depend upon the number of springs and dashpots.

- Solution is found using Laplace transform.

Maxwell model: n = 1, m = 1, $p_0 = 1/\mu$, $p_1 = 1/E$ and $q_0=1$, $q_1=1$

Kelvin model: n = 0, m = 1, $p_0 = 1$, $q_0=E$, and $q_0 = \mu$ for the.

madhuvable.org

C5.12 Three bars are made from Maxwell's material with E = 200 GPa and μ= 100 (10^6) GPa-sec and have an area of cross-section of 650 mm^2. Determine the displacement of point D (a) at t = 0. (b) after 100 hours.(c) after 10,000 hours.

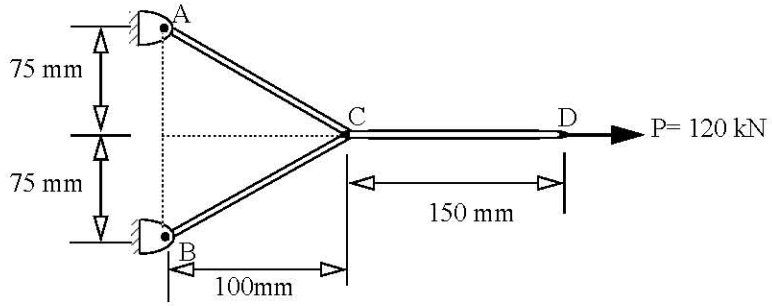

madhuvable.org