Composite Structural Members

(a) (b)

Courtesy (a) *Thomas Ducroquet* http://commons.wikimedia.org/wiki/File:Columbia_ITT_bicycle.jpg (b) *NASA/DFRC/Larry Sammons* http://www.dvidshub.net/image/848140/x-29 Alt site

The learning objective of this chapter are:

- To understand the incorporation and implications of material nonhomogeneity across the cross section in the theories for axial members, circular shafts in torsion, and the symmetric bending of beams.
- To understand the use of the rule of mixture, and the inverse rule of mixtures in obtaining the macroscopic properties of a composite from its constituent properties.

Pick up point in the logic

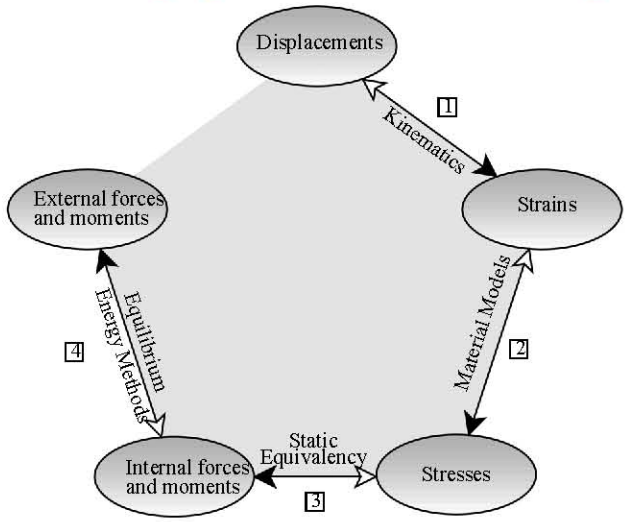

- Assumptions 1 through 7

	Axial	Bending	Torsion
Deformation	$u = u_o(x)$ **(3.1-A)**	$v = \mathrm{v}(x)$ **(3.1a-B)** $u = -y(d\mathrm{v}/dx)$ **(3.1b-B)**	$\phi = \phi(x)$ **(3.1-T)**
Strain	$\varepsilon_{xx} = du_o/dx$ **(3.2-A)**	$\varepsilon_{xx} = -y(d^2\mathrm{v}/dx^2)$ **(3.2-B)**	$\gamma_{x\theta} = \rho(d\phi/dx)$ **(3.2-T)**
Stress	$\sigma_{xx} = E(du_o/dx)$ **(3.3-A)**	$\sigma_{xx} = -Ey(d^2\mathrm{v}/dx^2)$ **(3.3-B)**	$\tau_{x\theta} = G\rho(d\phi/dx)$ **(3.3-T)**
Static equivalency	$N = \int_A \sigma_{xx} dA$ **(3.4a-A)** $M_z = -\int_A y\sigma_{xx} dA = 0$ **(3.4b-A)** $M_y = -\int_A z\sigma_{xx} dA = 0$ **(3.4c-A)**	$N = \int_A \sigma_{xx} dA = 0$ **(3.4a-B)** $M_z = -\int_A y\sigma_{xx} dA$ **(3.4b-B)** $V_y = \int_A \tau_{xy} dA$ **(3.4c-B)**	$T = \int_A \rho\tau_{x\theta} dA$ **(3.4-T)**
Origin Location	$\int_A yE dA = 0$ **(3.5-A)**	$\int_A yE dA = 0$ **(3.5-B)**	
	$N = (du_o/dx)\int_A E dA$ **(3.6-A)**	$\boldsymbol{M_z} = (d^2\mathrm{v}/dx^2)\int_A Ey^2 dA$ **(3.6-B)**	$\boldsymbol{T} = (d\phi/dx)\int_A G\rho^2 dA$ **(3.6-T)**

- Assumption 8 of material homogenity is not valid.
- Write each integral over the area as sum of integrals over each material area and take material constant outside the integral.

Composite Axial Members

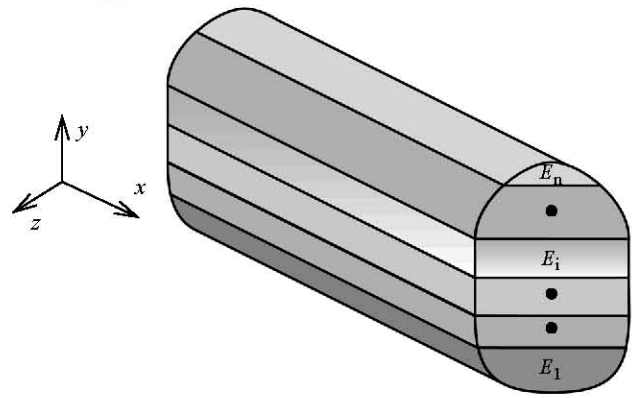

$$\sigma_{xx} = E\frac{du}{dx}(x)$$

Internal Forces and Moments

$$N = \int_A \sigma_{xx} dA \qquad M_z = -\int_A y\sigma_{xx} dA = 0 \quad \text{or} \quad N = \frac{du}{dx}(x)\int_A E\,dA$$

Location of origin: $\int_A yE\,dA = 0$

Formulas for composite axial rods

$$N = \frac{du}{dx}\int_A E\,dA = \frac{du}{dx}\left[\int_{A_1} E_1 dA + \int_{A_2} E_2 dA + \cdot + \cdot + \int_{A_n} E_n dA\right]$$

$$\boxed{N = \frac{du}{dx}\left[\sum_{j=1}^{n} E_j A_j\right]}$$

$$\boxed{(\sigma_{xx})_i = \frac{NE_i}{\sum_{j=1}^{n} E_j A_j}} \qquad \boxed{u_2 - u_1 = \frac{N(x_2 - x_1)}{\sum_{j=1}^{n} E_j A_j}}$$

Location of axial force application (origin)

$$\eta_c = \frac{\sum_{j=1}^{n} \eta_i E_i A_i}{\sum_{j=1}^{n} E_j A_j}$$

- Axial strain is uniform across entire cross section of a composite rod.
- Axial stress is uniform in each material.
- There is a discontinuity in axial stress at junction of each material.

Example 4.2

$\varepsilon_{xx} = -200\mu \qquad E_{steel} = 30,000 \text{ ksi} \qquad E_{wood} = 8,000 \text{ ksi}$

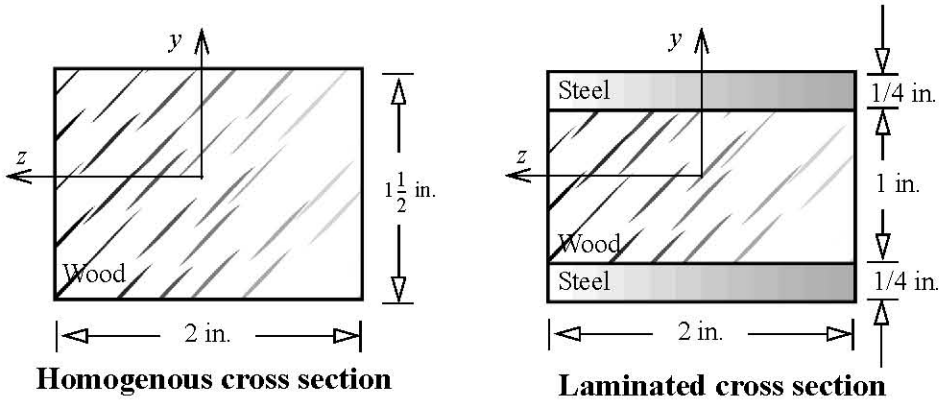

Homogenous cross section **Laminated cross section**

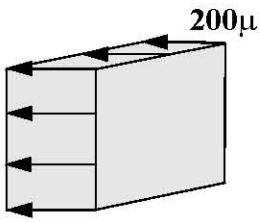

Homogenous & Laminated

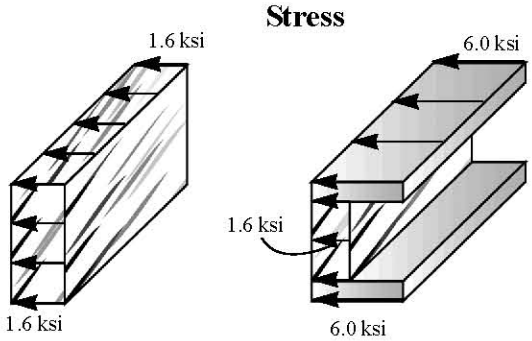

Homogenous **Laminated**

Internal Axial Force For Composite

$$N_{St} = \int_{A_{St}} \sigma_{xx} dA = (6)(2)(1/4)$$

$$N_W = \int_{A_W} \sigma_{xx} dA = (1.6)(2)(1)$$

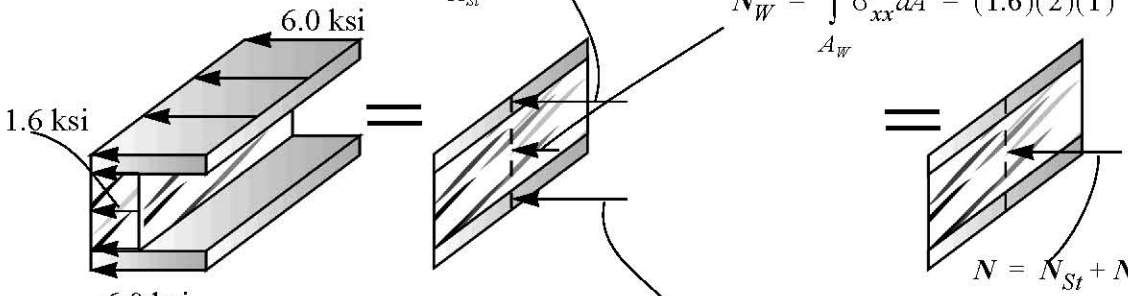

$$N = N_{St} + N_W + N_{Sb}$$

$$N_{Sb} = \int_{A_{Sb}} \sigma_{xx} dA = (6)(2)(1/4)$$

C4.1 A wooden rod (E_W = 2000 ksi) and steel strip (E_s = 30,000 ksi) are fastened securely to each other and to the rigid plates as shown below. Determine (a) the location h of the line along which the external forces must act to produce no bending. (b) the maximum axial stress in steel and wood.

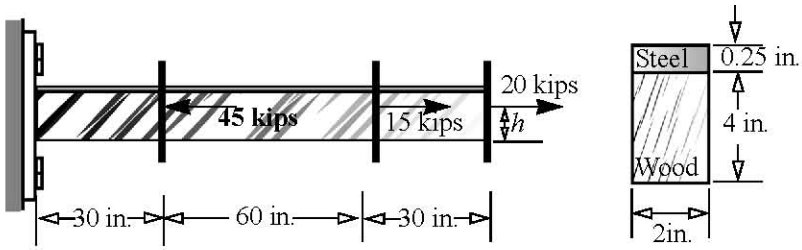

C4.2 A column for use in a building is modeled as shown below. The column is constructed by reinforcing concrete with nine steel circular bars of diameter 1 inch. The modulus of elasticity for concrete and steel are E_c= 4,500 ksi and E_s = 30,000 ksi. Determine the maximum axial stress in concrete and steel.

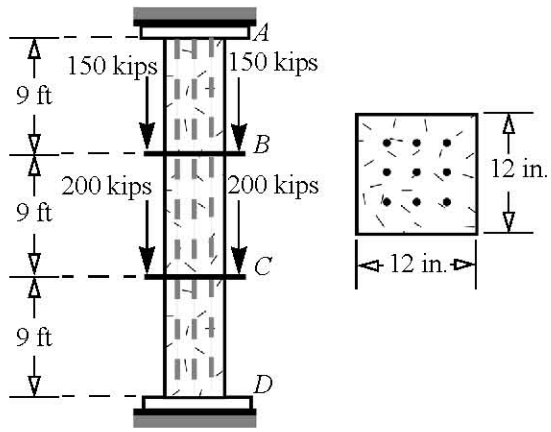

Composite Shafts

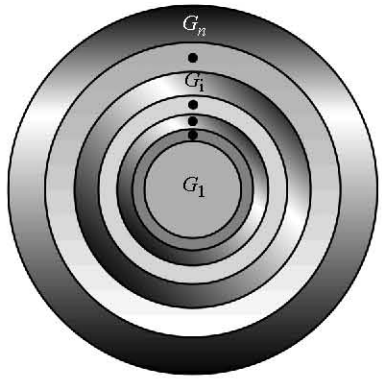

$$\tau_{x\theta} = G\rho\frac{d\phi}{dx}(x)$$

Internal Forces and Moments

$$T = \int_A \rho\tau_{x\theta}dA \quad \text{or} \quad \boldsymbol{T} = \frac{d\phi}{dx}\int_A G\rho^2 dA$$

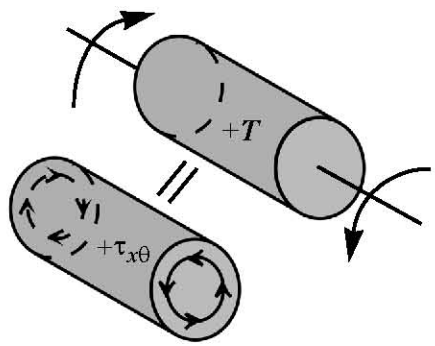

Formulas for composite shafts

$$\boldsymbol{T} = \frac{d\phi}{dx}\left[\int_{A_1} G_1\rho^2 dA + \int_{A_2} G_2\rho^2 dA + \cdot + \cdot + \int_{A_n} G_n\rho^2 dA\right]$$

$$\boxed{\boldsymbol{T} = \frac{d\phi}{dx}\left[\sum_{j=1}^{n} G_j J_j\right]}$$

$$\boxed{(\tau_{x\theta})_i = \frac{G_i\rho\boldsymbol{T}}{\left[\sum_{j=1}^{n} G_j J_j\right]}} \qquad \boxed{\phi_2 - \phi_1 = \frac{\boldsymbol{T}(x_2 - x_1)}{\left[\sum_{j=1}^{n} G_j J_j\right]}}$$

Variation of torsional shear strain and stress

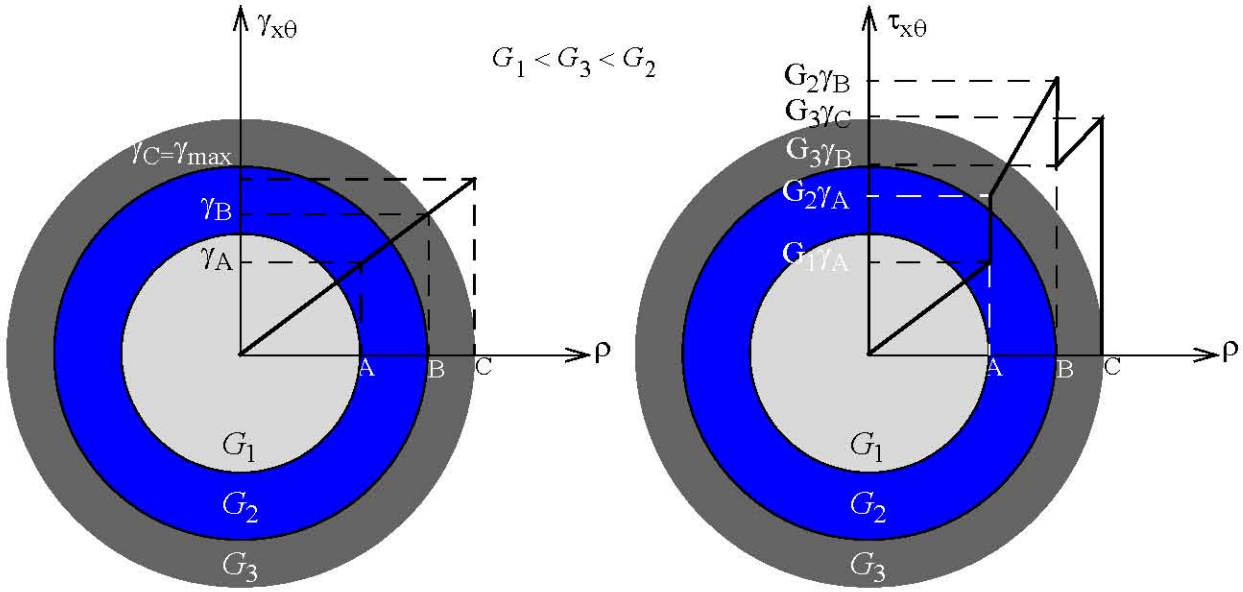

- Torsional shear strain varies linearly in the radial direction across the composite shaft.
- Maximum torsional shear strain is at the outer most radius of the shaft.
- Torsional shear stress varies linearly in the radial direction in each material with slopes that depend upon shear modulus G.
- Torsional shear stress is discontinuous at the junction of each material.
- Maximum torsional shear stress in each material is at point that is furthest from the center.
- Maximum torsional shear stress in the shaft may not be at the outer most radius of the shaft.

C4.3 A solid steel (G = 80 GPa) shaft 3 m long is securely fastened to a hollow bronze (G = 40 GPa) shaft that is 2 m long as shown below. Determine (a) the magnitude of maximum shear stress in the shaft. (b) the rotation of section at 1 m from the left wall.

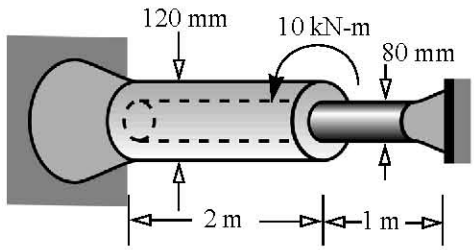

Composite Beams

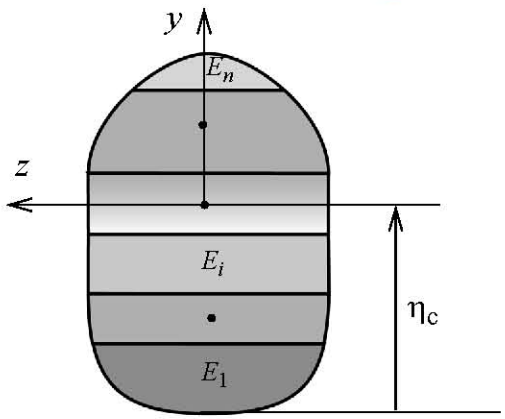

$$\sigma_{xx} = -Ey\frac{d^2v}{dx^2}(x)$$

Internal Forces and Moments

$$N = \int_A \sigma_{xx} dA = 0 \qquad M_z = -\int_A y\sigma_{xx} dA \quad \text{or} \quad M_z = \frac{d^2v}{dx^2}\int_A Ey^2 dA$$

Location of neutral axis origin: $\int_A yEdA = 0$ $\qquad \eta_c = \dfrac{\sum_{j=1}^{n} \eta_j E_j A_j}{\sum_{j=1}^{n} E_j A_j}$

Formulas for composite beams

$$M_z = \frac{d^2v}{dx^2}\left[\int_{A_1} E_1 y^2 dA + \int_{A_2} E_2 y^2 dA + \cdot + \cdot + \int_{A_n} E_n y^2 dA\right]$$

$$\boxed{M_z = \frac{d^2v}{dx^2}\left[\sum_{j=1}^{n} E_j (I_{zz})_j\right]} \qquad \boxed{(\sigma_{xx})_i = -\left[\frac{E_i y M_z}{\sum_{j=1}^{n} E_j (I_{zz})_j}\right]}$$

- Bending normal strain varies linearly across the cross section in the y direction.
- Bending normal strain at a cross section is maximum at a point that is furthest away from the neutral axis.
- Bending normal stress varies linearly in each material with slopes that depend upon the modulus of elasticity E.
- There is a discontinuity in bending normal stress at junction of each material.
- The maximum bending normal stress in each material is at point on the material that is furthest from the neutral axis of a composite beam.
- Maximum bending normal stress may not be at a point that is furthest away from the neutral axis.

Example 4.8

$\varepsilon_{xx} = -200\mu$ $E_{steel} = 30,000$ ksi $E_{wood} = 8,000$ ksi

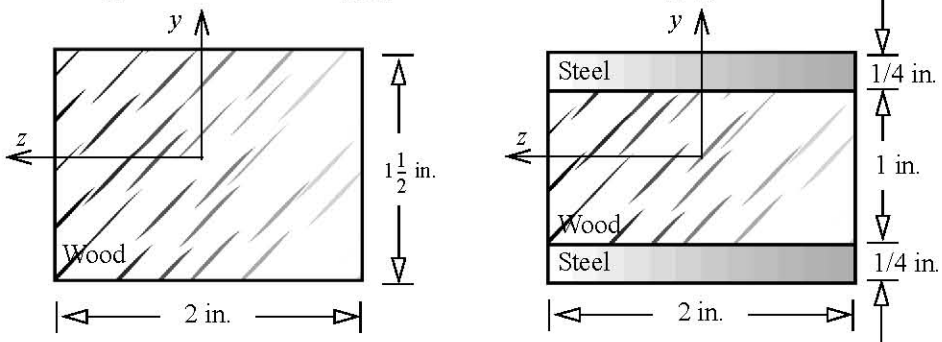

Homogenous cross section **Laminated cross section**

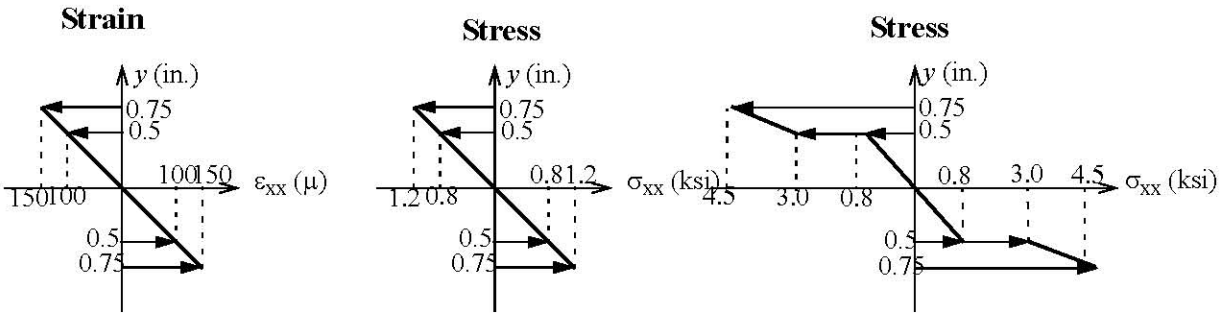

Homogenous & Laminated **Homogenous** **Laminated**

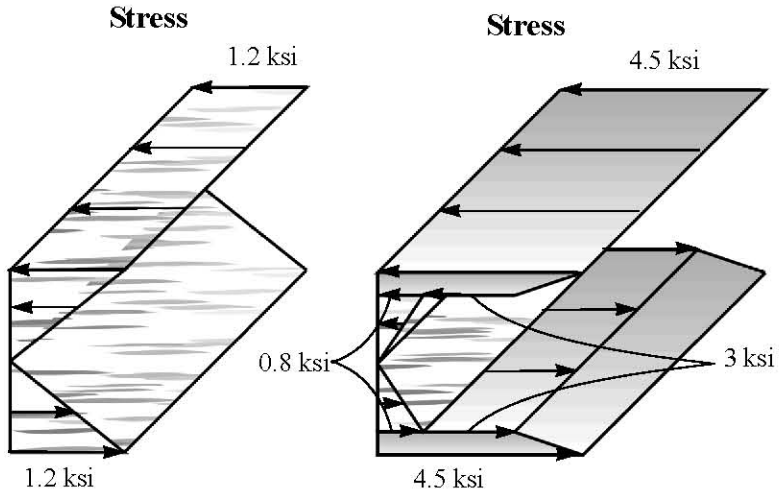

Homogenous **Laminated**

Bending shear stress in composite beams

Equilibrium equation

$$\tau_{sx} t = -\frac{\mathrm{d}\boldsymbol{N}_s}{\mathrm{d}x} = -\frac{\mathrm{d}}{\mathrm{d}x}\int_{A_s} \sigma_{xx} dA$$

$$\tau_{sx} t = -\frac{\mathrm{d}}{\mathrm{d}x}\int_{A_s} \frac{-Ey\boldsymbol{M}_z}{\sum_{j=1}^{n} E_j (I_{zz})_j} dA = \frac{\mathrm{d}}{\mathrm{d}x}\left[\frac{\boldsymbol{M}_z}{\sum_{j=1}^{n} E_j (I_{zz})_j}\int_{A_s} Ey dA\right] = \frac{\mathrm{d}}{\mathrm{d}x}\left[\frac{\boldsymbol{M}_z Q_{comp}}{\sum_{j=1}^{n} E_j (I_{zz})_j}\right]$$

$$Q_{comp} = \int_{A_s} Ey dA$$

$$\boxed{\tau_{sx} = \tau_{xs} = -\frac{Q_{comp} V_y}{[\sum_{j=1}^{n} E_j (I_{zz})_j] t}}$$

$$\boxed{Q_{comp} = \sum_{j=1}^{n_s} E_j (Q_z)_j}$$

- Q_{comp} is maximum at the neutral axis.
- Q_{comp} is continuous at all points on a cross section including the junctions of each material.
- The maximum bending shear stress in each material is at point closest to the neutral axis.
- The maximum bending shear stress at a cross section is at the neutral axis.
- The bending shear stress is continuous at all points on a cross section including the junctions of each material.

C4.4 To improve the load carrying capacity of a wooden beam (E_W = 2000 ksi) a steel strip (E_S = 30,000 ksi) is securely fastened to it as shown. Determine (a) the maximum intensity of the load w, if the allowable bending normal stresses in steel and wood are 20 ksi, and 4 ksi.respectively. (b) the magnitude of the maximum shear stress steel and wood corresponding to the load in part (a).

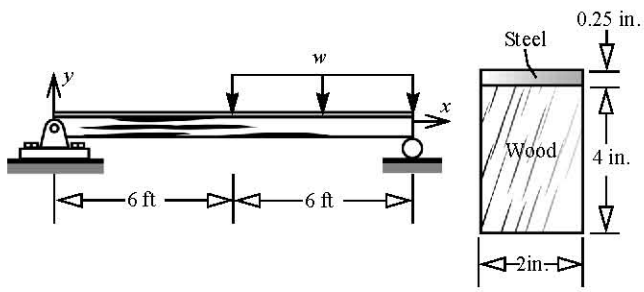

C4.5 A concrete beam is reinforced by embedding 20 mm x 20 mm square steel rods in the concrete, loaded and supported as shown. The allowable tensile bending normal stress is 160 MPa, and the allowable compressive bending normal stress for concrete is 20 MPa. Determine the maximum intensity of the distributed load w. Take the moduli of elasticity for steel and concrete as E_{St} = 200 GPa and E_{conc} = 28 GPa. Neglect the low capacity of concrete to support stresses in tension.