Material Description

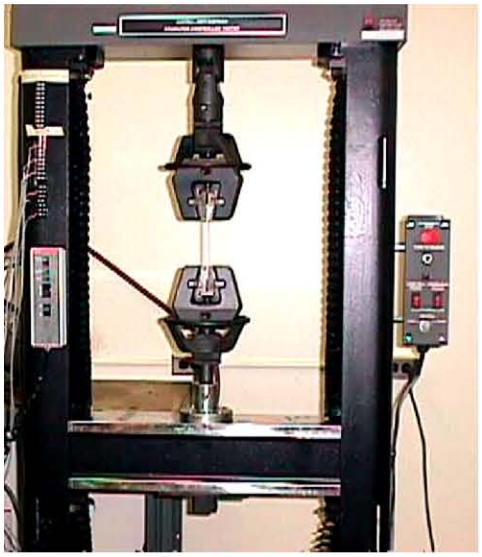

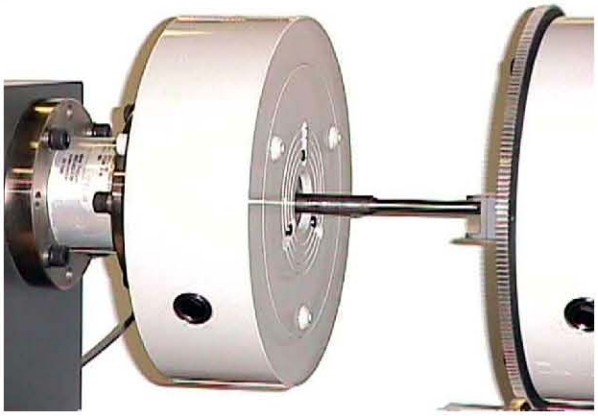

Courtesy of Professor I. Miskioglu.

The learning objectives in this chapter are:

- Understand the definition and differences of linear material models.
- Understand the statements and the applications of failure theories.
- Understand the concepts and applications of stress concentration factor and stress intensity factor in analysis and design.

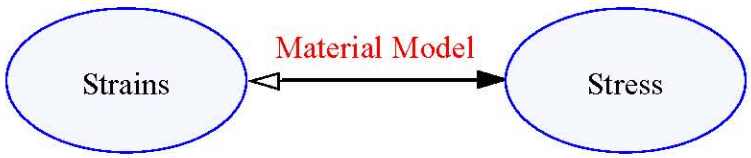

madiuvable.org

Linear Material Models

$$\begin{Bmatrix} \varepsilon_{xx} \\ \varepsilon_{yy} \\ \varepsilon_{zz} \\ \gamma_{yz} \\ \gamma_{zx} \\ \gamma_{xy} \end{Bmatrix} = \begin{bmatrix} C_{11} C_{12} C_{13} C_{14} C_{15} C_{16} \\ C_{12} C_{22} C_{23} C_{24} C_{25} C_{26} \\ C_{13} C_{23} C_{33} C_{34} C_{35} C_{36} \\ C_{41} C_{42} C_{43} C_{44} C_{45} C_{46} \\ C_{51} C_{52} C_{53} C_{54} C_{55} C_{56} \\ C_{61} C_{62} C_{63} C_{64} C_{65} C_{66} \end{bmatrix} \begin{Bmatrix} \sigma_{xx} \\ \sigma_{yy} \\ \sigma_{zz} \\ \tau_{yz} \\ \tau_{zx} \\ \tau_{xy} \end{Bmatrix}$$

$$C_{ij} = C_{ji}$$

- The most general linear anisotropic material requires 21 independent constants.

Monoclinic material

- Has 1 plane of symmetry.
- If *x-y* is the plane of symmetry then stress-strain relations in +ve & -ve *z* direction are the same.
- Requires 13 independent material constants.

$$\begin{Bmatrix} \varepsilon_{xx} \\ \varepsilon_{yy} \\ \varepsilon_{zz} \\ \gamma_{yz} \\ \gamma_{zx} \\ \gamma_{xy} \end{Bmatrix} = \begin{bmatrix} C_{11} C_{12} C_{13} & 0 & 0 & C_{16} \\ C_{12} C_{22} C_{23} & 0 & 0 & C_{26} \\ C_{13} C_{23} C_{33} & 0 & 0 & C_{36} \\ 0 & 0 & 0 & C_{44} C_{45} & 0 \\ 0 & 0 & 0 & C_{45} C_{55} & \\ C_{16} C_{26} C_{36} & 0 & 0 & C_{66} \end{bmatrix} \begin{Bmatrix} \sigma_{xx} \\ \sigma_{yy} \\ \sigma_{zz} \\ \tau_{yz} \\ \tau_{zx} \\ \tau_{xy} \end{Bmatrix}$$

- *x, y, z* are the *material coordinate system.*
- The zero's in the C matrix can become non-zero in coordinate systems other than *material coordinate system.*

madduvable.org

Orthotropic material

- Has two planes of symmetry.
- Requires 9 independent constants.

$$\begin{Bmatrix} \varepsilon_{xx} \\ \varepsilon_{yy} \\ \varepsilon_{zz} \\ \gamma_{yz} \\ \gamma_{zx} \\ \gamma_{xy} \end{Bmatrix} = \begin{bmatrix} C_{11} & C_{12} & C_{13} & 0 & 0 & 0 \\ C_{12} & C_{22} & C_{23} & 0 & 0 & 0 \\ C_{13} & C_{23} & C_{33} & 0 & 0 & 0 \\ 0 & 0 & 0 & C_{44} & 0 & 0 \\ 0 & 0 & 0 & 0 & C_{55} & \\ 0 & 0 & 0 & 0 & 0 & C_{66} \end{bmatrix} \begin{Bmatrix} \sigma_{xx} \\ \sigma_{yy} \\ \sigma_{zz} \\ \tau_{yz} \\ \tau_{zx} \\ \tau_{xy} \end{Bmatrix}$$

- *x, y, z* are the *material coordinate system.*
- The zero's in the C matrix can become non-zero in coordinate systems other than *material coordinate system.*

For plane stress problems

$$\varepsilon_{xx} = \frac{\sigma_{xx}}{E_x} - \frac{\nu_{yx}}{E_y}\sigma_{yy} \qquad \varepsilon_{yy} = \frac{\sigma_{yy}}{E_y} - \frac{\nu_{xy}}{E_x}\sigma_{xx} \qquad \gamma_{xy} = \frac{\tau_{xy}}{G_{xy}} \qquad \frac{\nu_{yx}}{E_y} = \frac{\nu_{xy}}{E_x}$$

Long Fiber Composite

- Each lamina is an orthotropic material.
- A symmetric stacking about mid surface creates an orthotropic composite plate.

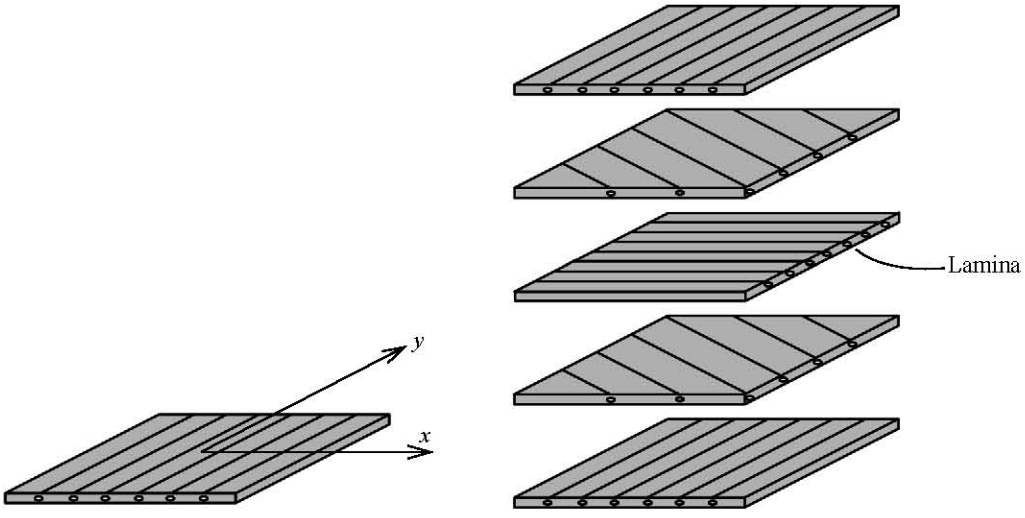

madhuvable.org

Transversely isotropic material

- Material is isotropic in a plane.
- Requires 5 independent material constants.

$$\begin{Bmatrix} \varepsilon_{xx} \\ \varepsilon_{yy} \\ \varepsilon_{zz} \\ \gamma_{yz} \\ \gamma_{zx} \\ \gamma_{xy} \end{Bmatrix} = \begin{bmatrix} C_{11} & C_{12} & C_{13} & 0 & 0 & 0 \\ C_{12} & C_{11} & C_{13} & 0 & 0 & 0 \\ C_{13} & C_{13} & C_{33} & 0 & 0 & 0 \\ 0 & 0 & 0 & C_{44} & 0 & 0 \\ 0 & 0 & 0 & 0 & C_{44} & \\ 0 & 0 & 0 & 0 & 0 & 2(C_{11}-C_{12}) \end{bmatrix} \begin{Bmatrix} \sigma_{xx} \\ \sigma_{yy} \\ \sigma_{zz} \\ \tau_{yz} \\ \tau_{zx} \\ \tau_{xy} \end{Bmatrix}$$

- The zero's in the C matrix can become non-zero in coordinate systems other than *material coordinate system.*

Short Fiber Composite

Chopped fiber is sprayed on to a epoxy produces a transversely isotropic material. It is isotropic in the plane.

Isotropic Material

- An isotropic material has a stress-strain relationships that are independent of the orientation of the coordinate system at a point.
- An isotropic body requires only two independent material constants

$$\begin{Bmatrix} \varepsilon_{xx} \\ \varepsilon_{yy} \\ \varepsilon_{zz} \\ \gamma_{yz} \\ \gamma_{zx} \\ \gamma_{xy} \end{Bmatrix} = \begin{bmatrix} C_{11} & C_{12} & C_{12} & 0 & 0 & 0 \\ C_{12} & C_{11} & C_{12} & 0 & 0 & 0 \\ C_{12} & C_{12} & C_{11} & 0 & 0 & 0 \\ 0 & 0 & 0 & 2(C_{11}-C_{12}) & 0 & 0 \\ 0 & 0 & 0 & 0 & 2(C_{11}-C_{12}) & \\ 0 & 0 & 0 & 0 & 0 & 2(C_{11}-C_{12}) \end{bmatrix} \begin{Bmatrix} \sigma_{xx} \\ \sigma_{yy} \\ \sigma_{zz} \\ \tau_{yz} \\ \tau_{zx} \\ \tau_{xy} \end{Bmatrix}$$

Engineering Constants: $C_{11} = 1/E$, $C_{12} = -\nu/E$, and $2(C_{11}-C_{12}) = 1/G$

- E = Modulus of Elasticity
- G = Shear Modulus of Elasticity
- ν = Poisson's Ratio

madduvable.org

Generalized Hooke's Law

$$\varepsilon_{xx} = [\sigma_{xx} - \nu(\sigma_{yy} + \sigma_{zz})]/E \qquad \gamma_{xy} = \tau_{xy}/G$$
$$\varepsilon_{yy} = [\sigma_{yy} - \nu(\sigma_{zz} + \sigma_{xx})]/E \qquad \gamma_{yz} = \tau_{yz}/G \qquad G = \frac{E}{2(1+\nu)}$$
$$\varepsilon_{zz} = [\sigma_{zz} - \nu(\sigma_{xx} + \sigma_{yy})]/E \qquad \gamma_{zx} = \tau_{zx}/G$$

$$\begin{Bmatrix} \varepsilon_{xx} \\ \varepsilon_{yy} \\ \varepsilon_{zz} \end{Bmatrix} = \frac{1}{E}\begin{bmatrix} 1 & -\nu & -\nu \\ -\nu & 1 & -\nu \\ -\nu & -\nu & 1 \end{bmatrix}\begin{Bmatrix} \sigma_{xx} \\ \sigma_{yy} \\ \sigma_{zz} \end{Bmatrix}$$

- Generalized Hooke's Law is valid for any orthogonal coordinate system.
- Principal direction for stress and strain are same *ONLY* for isotropic materials.
- A material is said to be homogenous if the material properties are the same at all points on the body. Alternatively, if the material constants C_{ij} are functions of the coordinates x, y, or z, then the material is called non-homogenous.

Plane Stress and Plane Strain.

Plane Stress → $\begin{bmatrix} \sigma_{xx} & \tau_{xy} & 0 \\ \tau_{yx} & \sigma_{yy} & 0 \\ 0 & 0 & 0 \end{bmatrix}$ Generalized Hooke's Law → $\begin{bmatrix} \varepsilon_{xx} & \gamma_{xy} & 0 \\ \gamma_{yx} & \varepsilon_{yy} & 0 \\ 0 & 0 & \varepsilon_{zz} = -\frac{\nu}{E}(\sigma_{xx} + \sigma_{yy}) \end{bmatrix}$

Plane Strain → $\begin{bmatrix} \varepsilon_{xx} & \gamma_{xy} & 0 \\ \gamma_{yx} & \varepsilon_{yy} & 0 \\ 0 & 0 & 0 \end{bmatrix}$ Generalized Hooke's Law → $\begin{bmatrix} \sigma_{xx} & \tau_{xy} & 0 \\ \tau_{yx} & \sigma_{yy} & 0 \\ 0 & 0 & \sigma_{zz} = \nu(\sigma_{xx} + \sigma_{yy}) \end{bmatrix}$

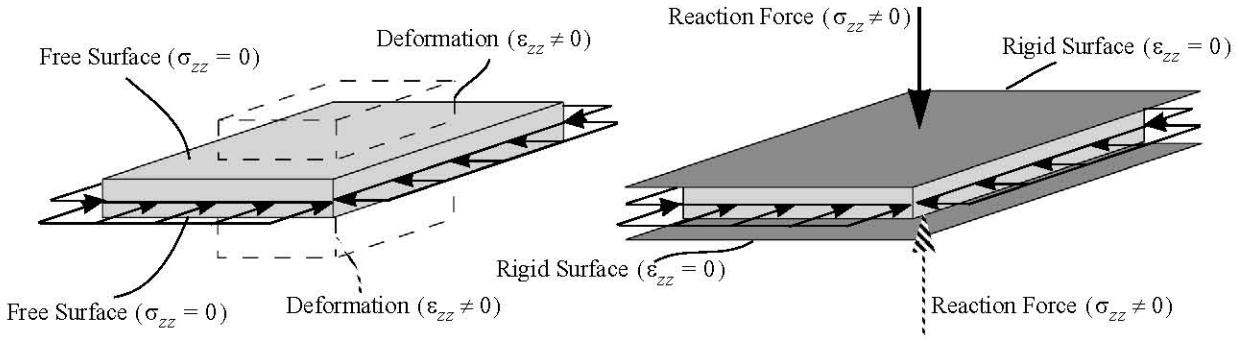

madiuvable.org

C2.1 An orthotropic material has the following properties E_x=7,500ksi, E_y= 2,500 ksi, G_{xy} = 1,250 ksi and ν_{xy}= 0.25. Determine the principal direction 1 for stresses and strains at a point on a free surface where the following strains were measured

$$\varepsilon_{xx} = -400 \ \mu \qquad \varepsilon_{yy} = 600 \ \mu \qquad \gamma_{xy} = -500 \ \mu$$

madiuvable.org

Failure Theories

- A failure theory is a statement on relationship of the stress components to material failure characteristics values.

	Ductile Material	Brittle Material
Characteristic failure stress	Yield stress	Ultimate stress
Theories	1. Maximum shear stress 2. Maximum octahedral shear stress	1. Maximum normal stress 2. Modified Mohr

Maximum shear stress theory

For ductile materials the theory predicts

A material will fail when the maximum shear stress exceeds the shear stress at yield that is obtained from uni-axial tensile test.

The failure criterion is

$$\tau_{max} \le \tau_{yield}$$

$$\boxed{max(|\sigma_1 - \sigma_2|, |\sigma_2 - \sigma_3|, |\sigma_3 - \sigma_1|) \le \sigma_{yield}}$$

Maximum octahedral shear stress theory (Maximum distortion strain energy or von-Mises criterion)

For ductile materials the theory predicts

A material will fail when the maximum octahedral shear stress exceeds the octahedral shear stress at yield that is obtained from uni-axial tensile test.

The failure criterion is

$$\tau_{oct} \le \overline{\tau_{yield}}$$

$$\frac{1}{\sqrt{2}}\sqrt{(\sigma_1 - \sigma_2)^2 + (\sigma_2 - \sigma_3)^2 + (\sigma_3 - \sigma_1)^2} \le \sigma_{yield}$$

Equivalent von-Mises Stress

$$\boxed{\sigma_{von} = \frac{1}{\sqrt{2}}\sqrt{(\sigma_1 - \sigma_2)^2 + (\sigma_2 - \sigma_3)^2 + (\sigma_3 - \sigma_1)^2}} \qquad \boxed{\sigma_{von} \le \sigma_{yield}}$$

madiuvable.org

Failure Envelopes for ductile materials in plane stress

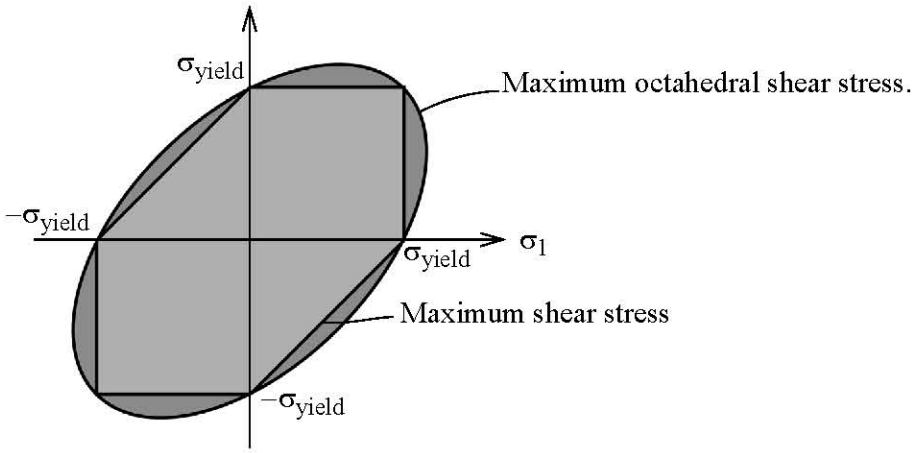

Maximum normal stress theory

For brittle materials the theory predicts

A material will fail when the maximum normal stress at a point exceed the ultimate normal stress (σ_{ult}) obtained from uni-axial tension test.

$$max(\sigma_1, \sigma_2, \sigma_3) \le \sigma_{ult}$$

- can be used *if principal stress one is tensile* and the *dominant principal* stress.

Examples of brittle and ductile material failure

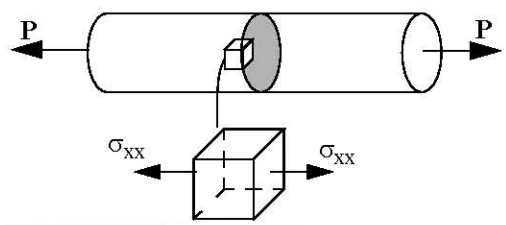

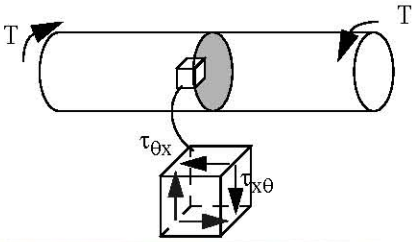

Cast Iron

Aluminum

madhuvable.org

Mohr's theory

For brittle materials the theory predicts

A material will fail if a stress state is on the envelope that is tangent to the three Mohr's circles corresponding to: uni-axial ultimate stress in tension, to uni-axial ultimate stress in compression, and to pure shear.

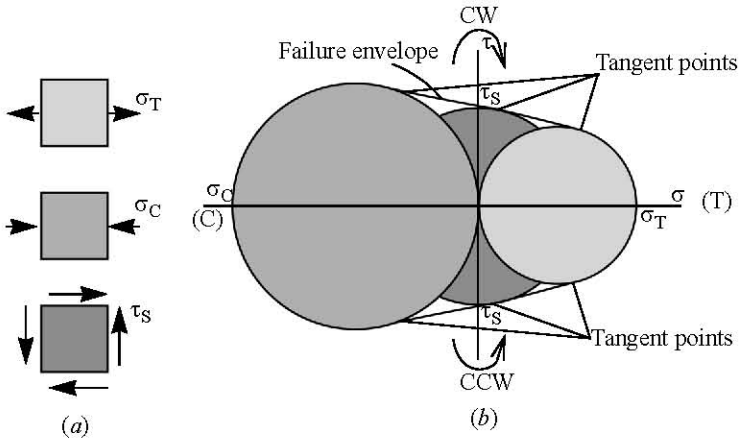

Modified Mohr's Theory

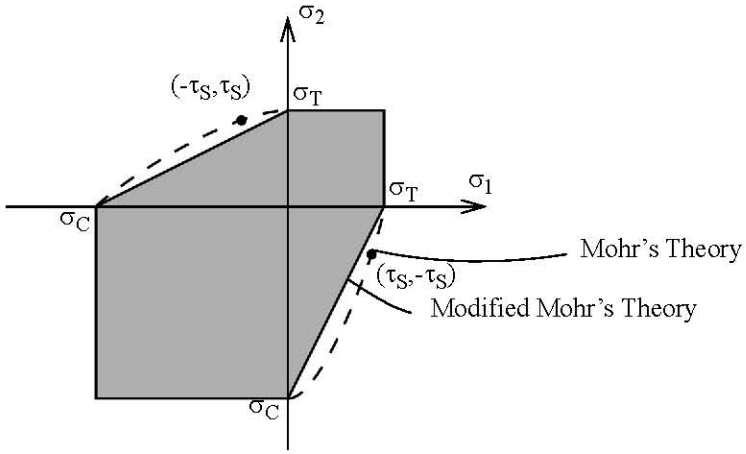

- If both principal stresses are tensile than the maximum normal stress has to be less than the ultimate tensile strength.
- If both principal stresses are negative than the maximum normal stress must be less than the ultimate compressive strength.
- If the principal stresses are of different signs then for the Modified Mohr's Theory the failure is governed by

$$\left|\frac{\sigma_2}{\sigma_C}-\frac{\sigma_1}{\sigma_T}\right| \le 1$$

- σ_C is the magnitude of the compressive strength.

madhuvable.org

C2.2 On a free surface of aluminum (E = 10,000 ksi, $\nu = 0.25$, σ_{yield} = 24 ksi), the strains recorded by the three strain gages shown below are $\varepsilon_a = -600\ \mu$ in/in, $\varepsilon_b = 500\ \mu$ in/in, and $\varepsilon_c = 400\ \mu$ in/in. By how much can the loads be scaled without exceeding the yield stress of aluminum at the point? Use the maximum shear stress theory.

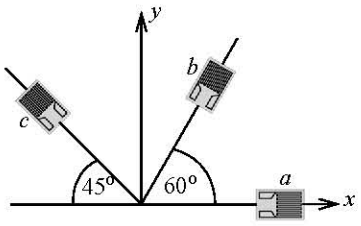

madhuvable.org

Saint-Venant's Principle

- Two statically equivalent loads systems produce nearly the same stress in regions at a distance that is at least equal to the largest dimension in the loaded region.

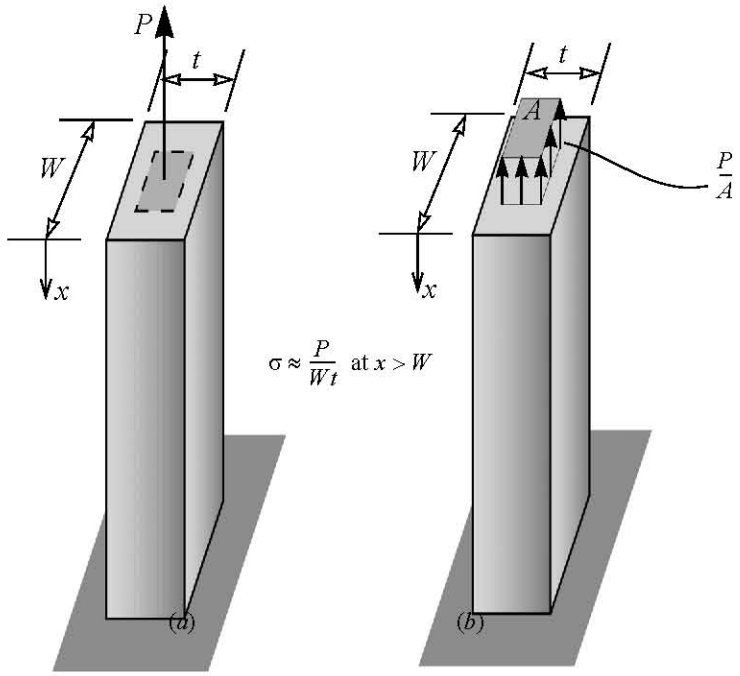

$$\sigma \approx \frac{P}{Wt} \quad \text{at } x > W$$

Stress Concentration

- Large stress gradients in a small region is called stress concentration.
- The stress predicted by theoretical models away from the regions of stress concentration is called the *Nominal Stress*.[1]

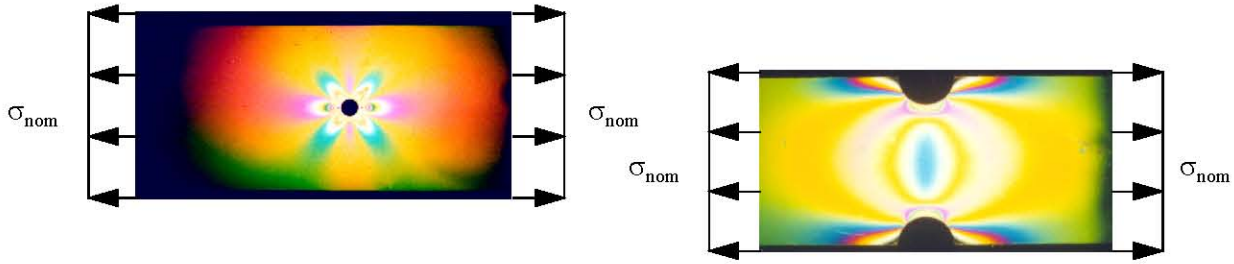

$$K_{conc} = \frac{Maximum\ \ Stress}{Nominal\ \ Stress}$$

1. Courtesy of Professor I. Miskioglu.

madhuvable.org

C2.3 The stress concentration factor for a flat tension bar with U-shaped notches shown was determined as:

$$K_{conc} = 3.857 - 5.066\left(\frac{4r}{H}\right) + 2.469\left(\frac{4r}{H}\right)^2 - 0.258\left(\frac{4r}{H}\right)^3$$

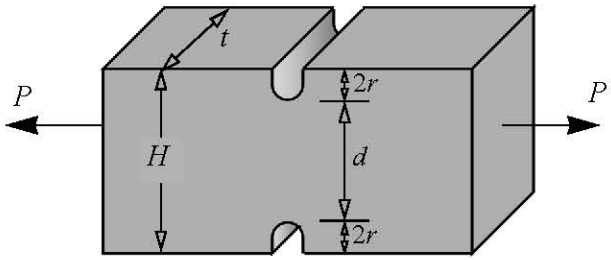

The nominal stress is P/(Ht). Make a chart for the stress concentration factor vs. (r/d) for the following values of (H/d): 1.25, 1.50, 1.75, 2.0. Use of spread sheet is recommended.

madiuvable.org

C2.4 A steel tension bar with U-shaped notches of the type shown, is to carry a load P = 12 kips. The yield stress of steel is 30 ksi. The bar has H = 9 in, t =0.25 in. For a factor of safety of 1.4, determine the value of r if yielding is to be avoided.

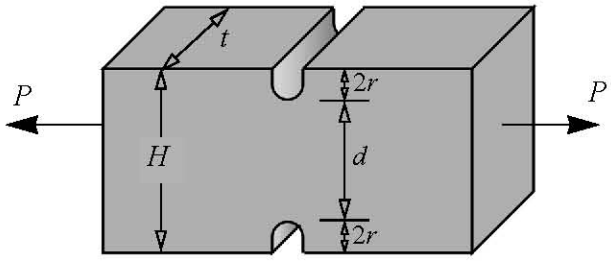

madhuvable.org

Stress Intensity Factor

An elliptical hole in an infinite plate.

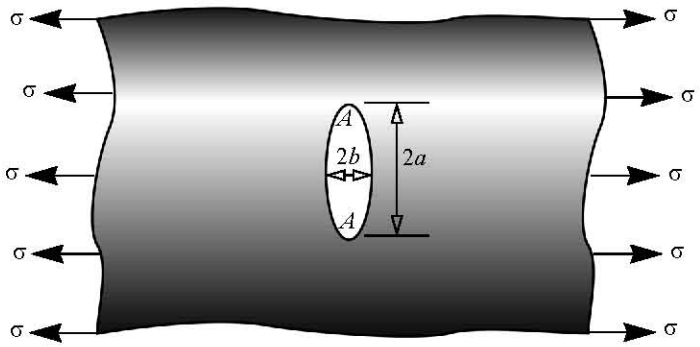

$$K_{conc} = (1 + 2a/b)$$

$$\sigma_{ij} = K_{inten} f_{ij}$$

Modulus of Toughness.

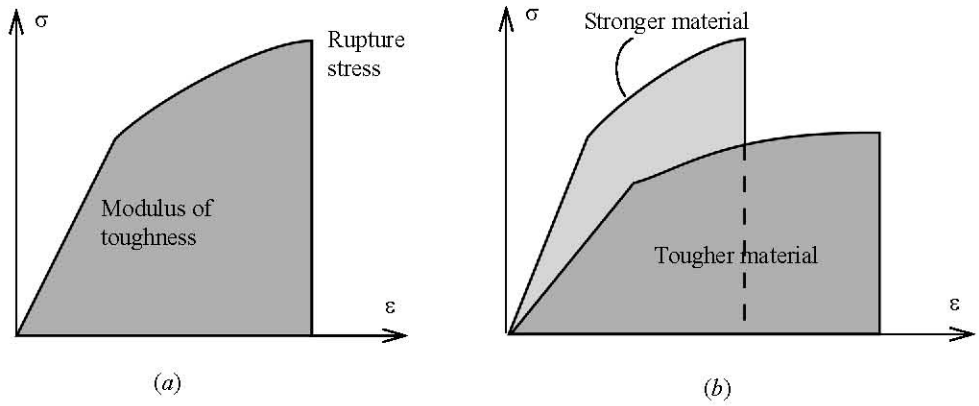

- Stress intensity factor depends upon the stress level and the length of the crack.
- Critical stress intensity factor is a material property that is independent of the stress level or crack length.
- A crack becomes unstable (material breaks) when stress intensity factor exceeds the critical stress intensity factor.

madiuvable.org

Three modes of relative crack surface movement

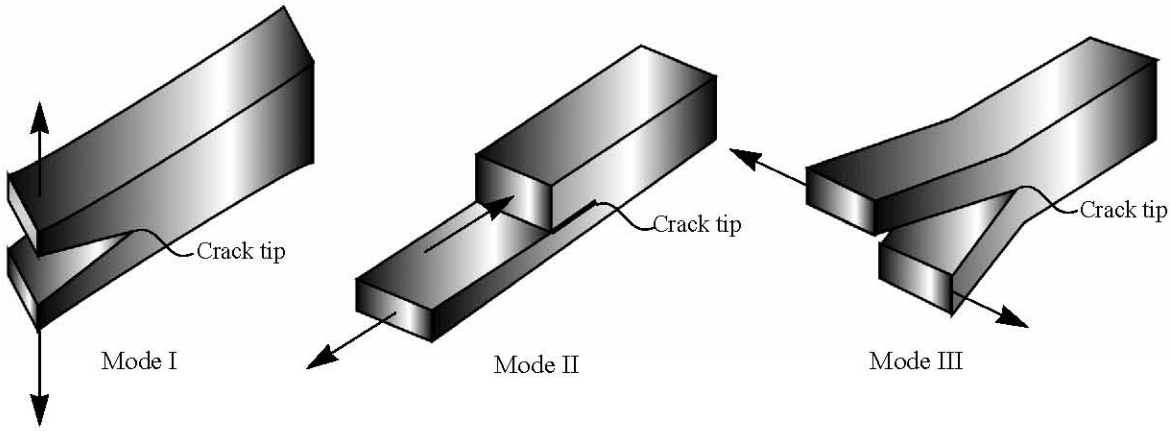

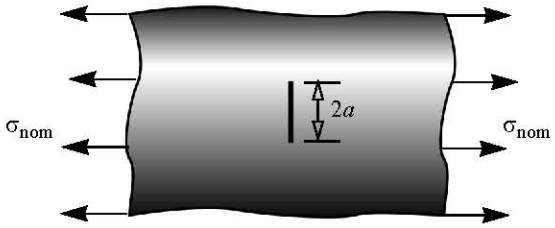

$$K_I = \sigma_{nom}\sqrt{\pi a}$$

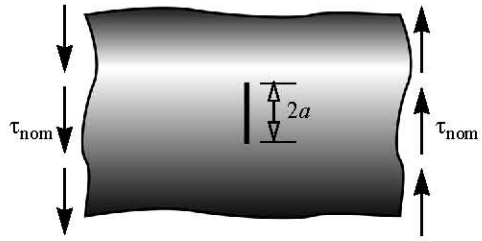

$$K_{II} = \tau_{nom}\sqrt{\pi a}$$

$$K_{equiv} = \sqrt{K_I^2 + K_{II}^2}$$

- Microcracks will be assumed to grow in Mode I due to principal stress one if it is in tension.
- Ductile Failure: The high stresses at the crack tip causes plastic deformation, thus blunting the tip of the crack. Subsequent growth depends on there being sufficient energy in the deformed solid to create new crack surfaces.
- Brittle Failure: Once critical crack length is reached the crack grows at speed in the neighborhood of 7000 ft/sec.
- Brittle fracture is used in getting clean surface breaks by scoring glass and plaster boards.

madiuvable.org

Examples of Ductile and Brittle Failures

- On December 15, 1967, Silver Bridge on U.S. Highway 35 bridge connecting Point Pleasant, West Virginia and Kanauga, Ohio suddenly collapsed into the Ohio River due to ductile failure of an pin connection killing 46 people and injuring another 9.
- National Bridge Inspection Standards (NBIS) were established soon after and now require periodic inspection of all bridges.

- On January 16th, 1943 a World War II tanker S.S. Schenectady, while tied to the pier on Swan Island in Oregon, fractured just aft of the bridge and broke in two. The fracture started as a small crack in a weld and propagated rapidly

Analysis Procedure

Following are the steps for incorporating an existing crack into an analysis.

Step 1. Determine the state of stress at the point of the crack: use elementary theory that does not include a crack.
Step 2. To find the normal and shear stresses on the inclined crack surface. These normal and shear stresses on the crack surface are the nominal stresses.
Step 3. Use Equations (2.23a) and (2.23b) to find the stress intensity factors K_{I} and K_{II}.
Step 4. Use Equations (2.24) to find the equivalent stress intensity factor.
Step 5. Compare the equivalent stress intensity factor with the critical stress intensity factor for a material and decide whether the crack is or is not stable.

If no existing crack orientation is specified, we shall assume microcracks that will grow in mode I on a plane of maximum tensile normal stress (i.e., on principal plane 1).

madhuvable.org

C2.5 The stresses at a point in plane stress were found to be:

$$\sigma_{xx} = 27 \ ksi(T) \qquad \sigma_{yy} = 10 \ ksi(C) \qquad \tau_{xy} = 15 \ ksi$$

The critical stress intensity factor of the material is $20 \ ksi\sqrt{in}$. Determine the critical crack length (a) assuming a small crack exist on a plane -25° from the x-axis. (b) there is no pre-existing crack.

madinuvable.org